LineLazer® V 200MMA 1:1 Airless Line Stripers with Fusion® MMA PC Spray Gun

3A9099C
EN

For the application of two component MMA 1:1 traffic marking materials. For professional use only. Not approved for use in explosive atmospheres or hazardous (classified) locations.

Maximum Operating Pressure: 3300 psi (22.8 MPa, 228 bar)

Important Safety Instructions

Read all warnings and instructions in this manual and in related manuals before using the equipment.
Be familiar with the controls and the proper usage of the equipment.
Save these instructions.

Important Medical Information

Read the medical alert card provided with the gun. It contains injection injury treatment information for a doctor. Keep it with you when operating the equipment.

Related Manuals:	
309277	Pump
3A3428	Auto-Layout Applications Methods
332230	Pressurized Bead System
	Honda Engine manual

Model:	HP Reflective 1 Auto Gun 1 PBS Tank	HP Reflective 2 Auto Guns 1 PBS Tank
17Y234 18B025	✓ CE	
17Y271	✓ with laser	
17Y513		✓ CE
17Y512		✓ with laser

All auto guns can be actuated manually.

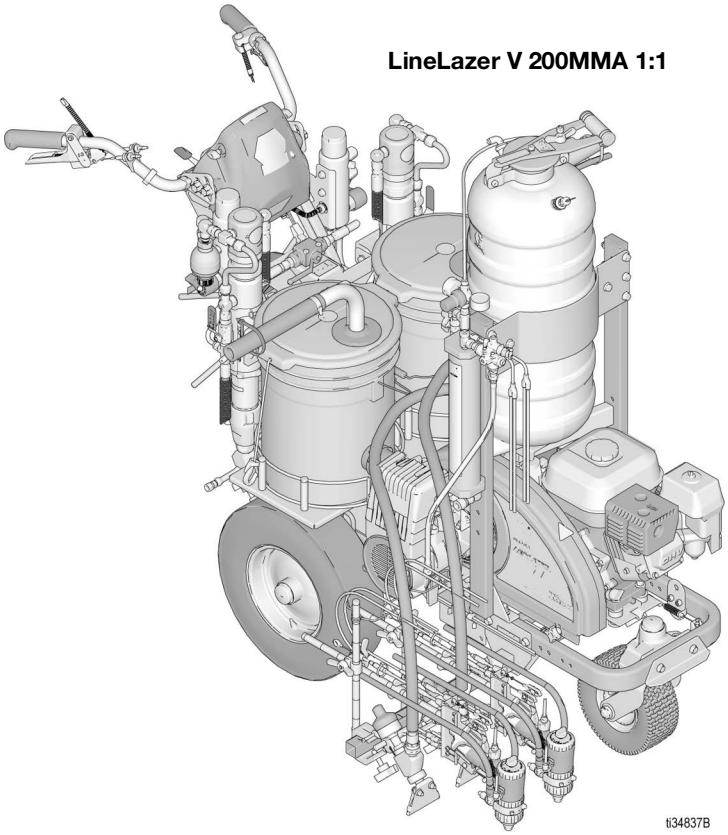

LineLazer V 200MMA 1:1

ti34837B

Use only genuine Graco replacement parts.
The use of non-Graco replacement parts may void warranty.

SERVICE to every customer, every time
?? WWW ??
www.graco.com/techsupport
GRACO

Contents

Important Grounding Information 3
Warnings 4
Important Laser Information for Units with Laser Option 7
Tip Selection 8
Component Identification - LLV 200MMA 9
Component Identification - Fusion MMA PC Gun 10
Piston Safety Lock 11
Loss of Air Pressure 11
Theory of Gun Operation 12
Grounding Instructions 13
Pails 13
Pressure Relief Procedure 14
Clear Spray Tip Adapter Clog 14
Clear Spray Tip Clogs 14
Setup 15
Assemble the Spray Gun 15
Setup Striper with Fusion MMA PC Gun 16
Keep Components A and B Separate 20
Changing Materials 20
Startup 21
Gun Placement 21
Position Gun 21
Manual Guns Selection 21
Auto Guns Selection 22
Gun Positions Chart 23
Gun Arm Mounts 24
Change Gun Position (Front and Back) 24
Change Gun Position (Left and Right) 24
Installation 25
Trigger Sensor Adjustment 25
Gun Cable Adjustment 26
Straight Line Adjustment 27
Handle Bar Adjustment 27
Dot Laser 28
Cleanup 29
Daily shutdown 31
LineLazer V LiveLook Display 32
HP Auto Series 32
Initial Setup (HP Auto Series) 33
Striping Mode (HP Auto Series) 35
Measure Mode (HP Auto Series) 36
Layout Mode 37
Stall Calculator 38
Angle Calculator 39
Setup/Information 41
Settings 42
Information 43
Data Logging 45
Maintenance - Fusion MMA PC Gun 46
Flush Gun 47
Clean Spray Tip Adapter and Mix Chamber Nozzle 47
Inspect the Check Valves 48
Clean Mix Chamber Impingement Ports 49
Remove the Fluid Cartridge 49
Reinstall or Replace the PC Fluid Cartridge 50
Inspect the Fluid Cartridge 51
Test Fluid Cartridge Restriction 51
Store the Fluid Cartridge 52
Clean Gun Surface 52
Clean Spray Tip Adapter 52
Lubrication 52
Inspect the Piston Safety Lock 52
Remove/Reinstall Gun Fluid Manifold 53
Clean Gun Fluid Manifold 53
Clean Passages 54
Clean Muffler 54
Remove and clean Muffler with acetone 54
Inspect the Piston 54
Inspect the Air Valve 55
Disassemble Front End of Fusion MMA PC Gun 56
Reassemble Front End of Fusion MMA PC Gun 56
Maintenance - LineLazer V 200MMA 1:1 57
Recycling and Disposal 58
Rechargeable Battery Disposal 58
End of Product Life 58
Hydraulic Oil/Filter Change 59
Removal 59
Installation 59
Troubleshooting 60
Gun Troubleshooting 65
Drill Bit Kits 68
Drill Bit Kit 68
Air Purge Handle Cleanout Drill Kit 68
LineLazer V 200MMA 1:1 69
Component Parts Drawings 69
Parts Drawing - Frame Assembly 70
Parts List - Frame Assembly 71
Parts Drawing - Gun Arm & Gun Trigger 72
Parts List 73
Gun Holder and Arm 73
Gun Trigger 73
Parts Drawing - Gun 74
Parts List - Gun 75
Detail Views - Gun 76
Notes 77
Parts Drawing - Handle/Controls 78
Parts List - Handle/Controls 79
Parts Drawing - Filters A & B 80
Parts List - Filters A & B 81
Parts Drawing - Fluid Pumps A & B 82
Parts List - Fluid Pumps A & B 83
Parts Drawing - Engine & Compressor 84
Parts List - Engine & Compressor 85
Parts Drawing - EZ AlignTM Swivel Wheel 86
Parts List - EZ Align Swivel Wheel 87
Parts Drawing - Pressure Tank 88
Parts List - Pressure Tank 89
Gun Accessories 90
Stainless Steel Side Seal Kits 90
Polycarballoy Side Seal Kits 90
Gun Cover 90
Lubricant for Gun Rebuild 90
Grease Cartridge for Gun Shutdown 90
Flushing Manifold 90
Solvent Flush Canister Kit 90
Solvent Flush Pail Kit 90
Gun Cleaning Kit 90
Check Valve Filter Screen Kits 91
Drill Bit Kit 91
Handle Cleanout Drill Kit 91
Acceptable Cartridge Storage Liquids 91
Cartridge Kits 91
Fusion PC Cartridge Tools 91
MMA Static Mixer 91
Wiring Diagram 92
World Symbol Key 93
Technical Specifications 94
Technical Specifications - Gun 95
Graco Standard Warranty 97

Important Grounding Information

The following information is intended to help you understand when to use the grounding wire and clamp provided with your striper. It is required when flushing or cleaning with flammable materials.

Please read the information on the material container label to determine if it is flammable. Ask for a Safety Data Sheet (SDS) from your supplier. The container label and SDS will explain the contents of the material and the specific precautions related to it.

Flushing and clean-up materials generally fit into one of the following **3 basic types:**

Grounding Wire and Clamp Required?	Type of Flushing or Cleaning Material
Yes 	***FLAMMABLE:*** This type of material contains flammable solvents such as xylene, toluene, naphtha, MEK, lacquer thinner, acetone, denatured alcohol, and turpentine. The container label should indicate that this material is FLAMMABLE. Use flammable materials outdoors or in a well-ventilated area with a flow of fresh air. Follow **Grounding Instructions**, page 13, when using this type of material.
No	***OIL-BASED:*** The container label should indicate that the material is COMBUSTIBLE and can be cleaned up with mineral spirits or non-flammable paint thinner.
No	***WATER:*** The container label of the material being sprayed should indicate that it can be cleaned with soap and water.

NOTE: When using the spray gun by hand, static build up and static shocks can occur. If you cannot position the striper on a grounded surface and connect the grounding wire and clamp to a metal post, try the following to help reduce the risk of static build up:

- Stand on a true grounded surface when spraying, such as grass
- Try wearing a different type of shoes

Warnings

The following warnings are for the setup, use, grounding, maintenance, and repair of this equipment. The exclamation point symbol alerts you to a general warning and the hazard symbols refer to procedure-specific risks. When these symbols appear in the body of this manual or on warning labels, refer back to these Warnings. Product-specific hazard symbols and warnings not covered in this section may appear throughout the body of this manual where applicable.

⚠WARNING



FIRE AND EXPLOSION HAZARD

Flammable fumes, such as solvent and paint fumes, in **work area** can ignite or explode. Paint or solvent flowing through the equipment can cause static sparking. To help prevent fire and explosion:

- Use equipment only in well ventilated area.
- Do not fill fuel tank while engine is running or hot; shut off engine and let it cool. Fuel is flammable and can ignite or explode if spilled on hot surface.
- Eliminate all ignition sources; such as pilot lights, cigarettes, portable electric lamps, and plastic drop cloths (potential static sparking).
- Ground all equipment in the work area. See **Grounding** instructions.
- Never spray or flush solvent at high pressure.
- Keep work area free of debris, including solvent, rags and gasoline.
- Do not plug or unplug power cords, or turn power or light switches on or off when flammable fumes are present.
- Use only grounded hoses.
- Hold gun firmly to side of grounded pail when triggering into pail. Do not use pail liners unless they are antistatic or conductive.
- **Stop operation immediately** if static sparking occurs or you feel a shock. Do not use equipment until you identify and correct the problem.
- Keep a working fire extinguisher in the work area.



SKIN INJECTION HAZARD

High-pressure spray is able to inject toxins into the body and cause serious bodily injury. In the event that injection occurs, **get immediate surgical treatment.**

- Do not aim the gun at, or spray any person or animal.
- Keep hands and other body parts away from the discharge. For example, do not try to stop leaks with any part of the body.
- Always use the spray tip guard. Do not spray without spray tip guard in place.
- Use Graco spray tips.
- Use caution when cleaning and changing spray tips. In the case where the spray tip clogs while spraying, follow the **Pressure Relief Procedure** for turning off the unit and relieving the pressure before removing the spray tip to clean.
- Equipment maintains pressure after power is shut off. Do not leave the equipment energized or under pressure while unattended. Follow the **Pressure Relief Procedure** when the equipment is unattended or not in use, and before servicing, cleaning, or removing parts.
- Check hoses and parts for signs of damage. Replace any damaged hoses or parts.
- This system is capable of producing 3300 psi. Use Graco replacement parts or accessories that are rated a minimum of 3300 psi.
- Always engage the piston safety lock when not spraying. Verify the piston safety lock is functioning properly.
- Verify that all connections are secure before operating the unit.
- Know how to stop the unit and bleed pressure quickly. Be thoroughly familiar with the controls.

⚠WARNING



CARBON MONOXIDE HAZARD

Exhaust contains poisonous carbon monoxide, which is colorless and odorless. Breathing carbon monoxide can cause death.

- Do not operate internal combustion engine in an enclosed area.



EQUIPMENT MISUSE HAZARD

Misuse can cause death or serious injury.

- Do not operate the unit when fatigued or under the influence of drugs or alcohol.
- Do not exceed the maximum working pressure or temperature rating of the lowest rated system component. See **Technical Specifications** in all equipment manuals.
- Use fluids and solvents that are compatible with equipment wetted parts. See **Technical Specifications** in all equipment manuals. Read fluid and solvent manufacturer's warnings. For complete information about your material, request Safety Data Sheets (SDSs) from distributor or retailer.
- Do not leave the work area while equipment is energized or under pressure.
- Turn off all equipment and follow the **Pressure Relief Procedure** when equipment is not in use.
- Check equipment daily. Repair or replace worn or damaged parts immediately with genuine manufacturer's replacement parts only.
- Do not alter or modify equipment. Alterations or modifications may void agency approvals and create safety hazards.
- Make sure all equipment is rated and approved for the environment in which you are using it.
- Use equipment only for its intended purpose. Call your distributor for information.
- Route hoses and cables away from traffic areas, sharp edges, moving parts, and hot surfaces.
- Do not kink or over bend hoses or use hoses to pull equipment.
- Keep children and animals away from work area.
- Comply with all applicable safety regulations.



PRESSURIZED ALUMINUM PARTS HAZARD

Use of fluids that are incompatible with aluminum in pressurized equipment can cause serious chemical reaction and equipment rupture. Failure to follow this warning can result in death, serious injury, or property damage.

- Do not use 1,1,1-trichloroethane, methylene chloride, other halogenated hydrocarbon solvents or fluids containing such solvents.
- Do not use chlorine bleach.
- Many other fluids may contain chemicals that can react with aluminum. Contact your material supplier for compatibility.



MOVING PARTS HAZARD

Moving parts can pinch, cut or amputate fingers and other body parts.

- Keep clear of moving parts.
- Do not operate equipment with protective guards or covers removed.
- Equipment can start without warning. Before checking, moving, or servicing equipment, follow the **Pressure Relief Procedure** and disconnect all power sources.



ENTANGLEMENT HAZARD

Rotating parts can cause serious injury

- Keep clear of moving parts.
- Do not operate equipment with protective guards or covers removed.
- Do not wear loose clothing, jewelry or long hair while operating equipment.
- Equipment can start without warning. Before checking, moving, or servicing equipment, follow the **Pressure Relief Procedure** and disconnect all power sources.

⚠WARNING



TOXIC FLUID OR FUMES HAZARD

Toxic fluids or fumes can cause serious injury or death if splashed in the eyes or on skin, inhaled or swallowed.

- Read Safety Data Sheets (SDSs) to know the specific hazards of the fluids you are using.
- Store hazardous fluid in approved containers, and dispose of it according to applicable guidelines.



PERSONAL PROTECTIVE EQUIPMENT

Wear appropriate protective equipment when in the work area to help prevent serious injury, including eye injury, hearing loss, inhalation of toxic fumes, and burns. Protective equipment includes but is not limited to:

- Protective eyewear, and hearing protection.
- Respirators, protective clothing, and gloves as recommended by the fluid and solvent manufacturer.



BURN HAZARD

Equipment surfaces and fluid that’s heated can become very hot during operation. To avoid severe burns:

- Do not touch hot fluid or equipment.





BATTERY HAZARD

Lead-acid batteries produce explosive gases and contain sulfuric acid that can cause severe burns. To avoid sparks and injury when handling or working with a lead-acid battery.

- Read and follow the battery manufacturer’s warnings.
- Exercise caution when working with metallic tools or conductors to prevent short circuits and sparks.
- Keep all sparks, flames, and cigarettes away from batteries.
- Always wear protective eyewear and protective equipment for face, hands, and body.
- If you have direct contact with battery fluid, flush with water and consult a physician immediately.
- Installation and maintenance must be performed by knowledgeable personnel only.



ELECTRIC SHOCK HAZARD

Hazardous voltage is present in control box while engine is running.

- Turn off engine before servicing equipment.

Important Laser Information for Units with Laser Option

⚠WARNING



LASER LIGHT HAZARD: AVOID DIRECT EYE CONTACT

Eye exposure to Class IIIa3/3R levels of laser light can potentially present an eye (retinal) injury hazard, including spot blindness or other retinal injury. To avoid direct eye exposure:

- Never look directly in to a laser beam or point the beam into the eyes of others, even at long distances.
- Never shine the laser at mirror like surfaces which can cause specular reflections of the beam.
- Always set the laser at a height and angle that prevents the beam from shining into people's eyes.
- Immediately terminate laser emissions if personnel, animals or reflective objects approach the beam.
- Always turn off laser when unattended.
- Do not remove any warning labels from the laser.
- Only properly trained laser operators are to use this product.
- Never allow beams to be aimed toward traffic, vehicles, or heavy equipment. Even when not damaging at long distances, the high brightness of lasers can distract or disrupt vehicle operations.
- Never point a laser at an aircraft or law enforcement personnel. This is considered a felony in most locations, with the possibility of jail time, heavy fines or both.
- Do not disassemble laser product. Return to factory for all service procedures.
- Laser must be turned OFF when cleaning the lens, so as not to create unwanted laser refraction.



LASER RADIATION HAZARD

Use of controls or adjustments or performance of procedures other than those specified herein may result in hazardous radiation exposure.

- Do not attempt to open or disassemble the laser housing under any circumstances. Doing so may cause exposure to potentially hazardous levels of laser radiation.
- No serviceable parts within. Unit is factory sealed.



FIRE AND EXPLOSION HAZARD

Connecting directly to a generator source can create a short or sparking under certain conditions.

- Only connect GL1700 to a dedicated 12 volt DC battery source.

Tip Selection

	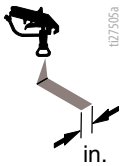 in. (cm)	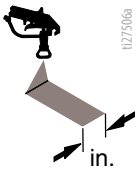 in. (cm)	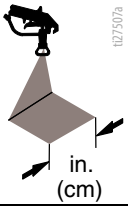 in. (cm)	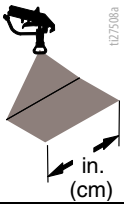 in. (cm)	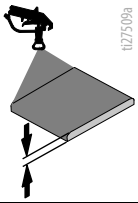	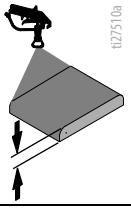	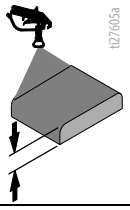
LL5321		4 (10)				✓	
LL5323		4 (10)				✓	
LL5325		4 (10)					✓
LL5327		4 (10)					✓
LL5329		4 (10)					✓
LL5331		4 (10)					✓
LL5333		4 (10)					✓
LL5335		4 (10)					✓
LL5355		4 (10)					✓
LL5423			6 (15)			✓	
LL5425			6 (15)			✓	
LL5427			6 (15)			✓	
LL5429			6 (15)			✓	
LL5431			6 (15)				✓
LL5435			6 (15)				✓
LL5625				12 (30)	✓		
LL5627				12 (30)	✓		
LL5629				12 (30)	✓		
LL5631				12 (30)		✓	
LL5635				12 (30)		✓	
LL5639				12 (30)			✓

Component Identification - LLV 200MMA

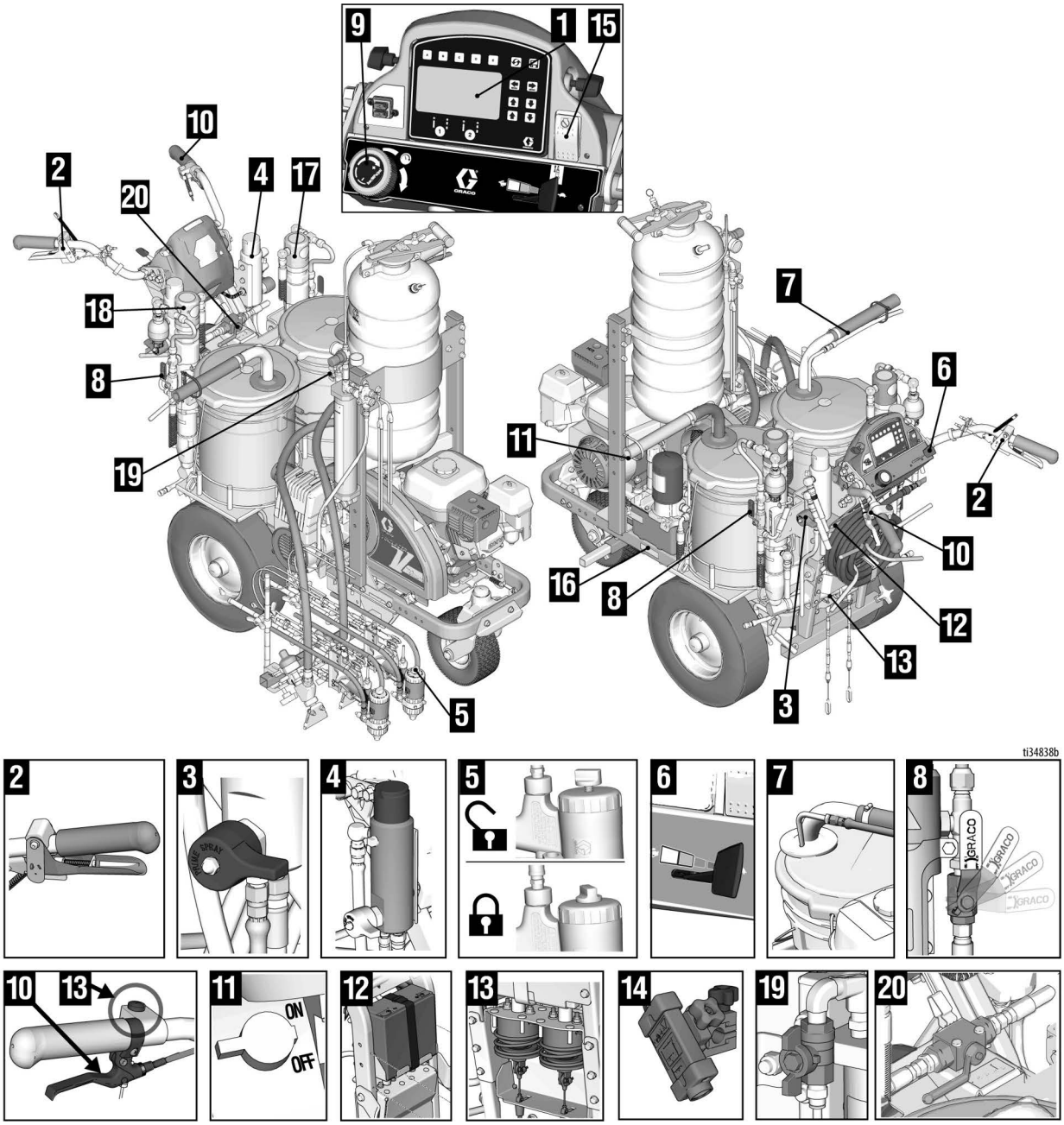

1	Display
2	Spray Gun Control
3	Prime/Spray Valve
4	Filter Manifold
5	Piston Safety Lock
6	Engine/Controls
7	Drain and Siphon Tubes
8	Pump ON/OFF Valve
9	Pressure Control
10	Turn Control

11	Engine STOP
12	12 Volt Battery
13	Gun Actuator
14	Layout Laser
15	Engine Kill Switch
16	Identification Label
17	A Side Fluid Pump
18	B Side Fluid Pump
19	Purge Air Valve
20	Proportioning Valve

Component Identification - Fusion MMA PC Gun

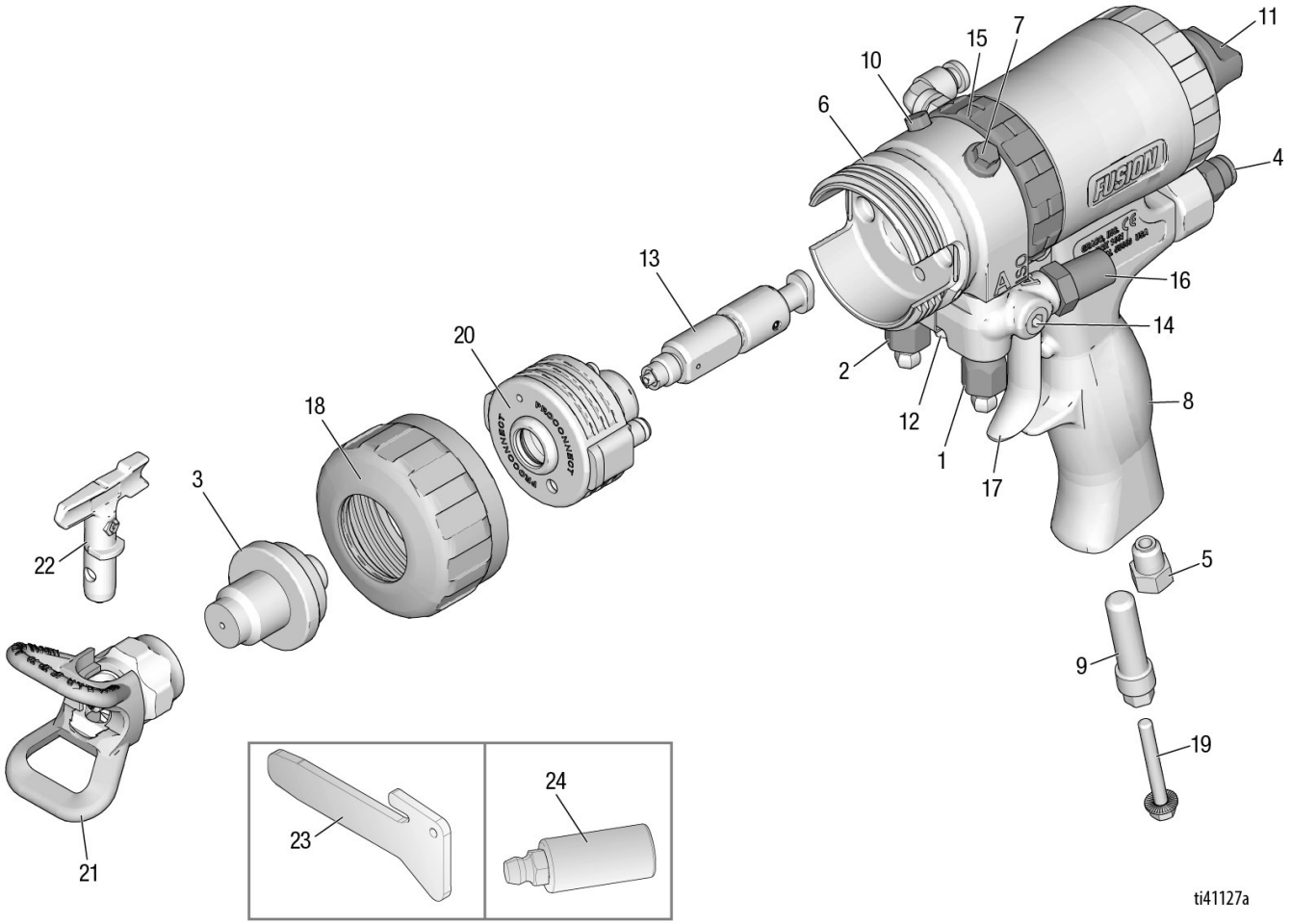

1	A Side Fluid Valve
2	B Side Fluid Valve
3	Spray Tip Adapter
4	Air Line Quick Coupler
5	Muffler
6	Fluid Housing
7	Grease Fitting (under cap)
8	Handle
9	Jack Screw Holder/Optional Air Inlet
10	Cleanoff Air Valve
11	Piston Safety Lock
12	Gun Fluid Manifold

13	Mix Chamber
14	Optional Fluid Inlets (A side shown)
15	Lock Ring
16	Fluid Inlet Swivels (A side shown)
17	Trigger
18	Front Retaining Ring
19	Jack Screw
20	PC Fluid Cartridge
21	Tip Guard
22	Spray Tip
23	Divider Tool
24	Grease Tool

Piston Safety Lock

Engage Piston Safety Lock whenever you are handling the gun out of the holder and the gun is under pressure, to avoid accidental triggering.

High-pressure fluid from dispensing devises can pierce skin. To help prevent serious injury from pressurized fluid, always engage the Piston Safety Lock when handling the gun out of the holder.				

To engage Piston Safety Lock: Push knob in and turn clockwise. If engaged, gun will not actuate.

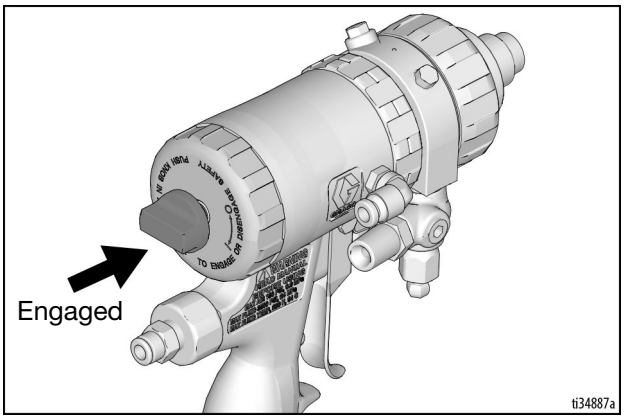

To disengage Piston Safety Lock: push knob in and turn counterclockwise until it pops out. There will be a gap between knob and gun body.

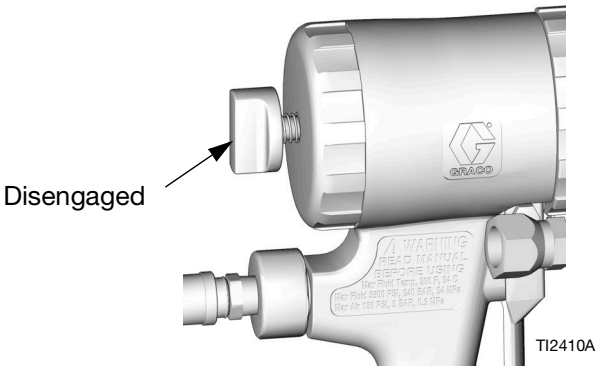

Loss of Air Pressure

In event of loss of air pressure, gun will continue to spray. To shut off gun, do one of the following:

- Engage the **Piston Safety Lock**, page 11.
- Close Fluid Valves A and B.

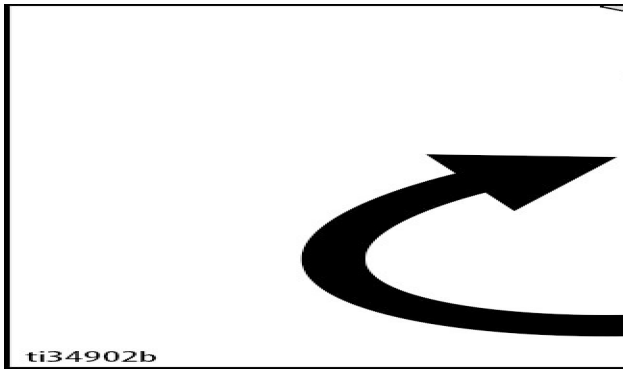

Theory of Gun Operation

Gun Triggered (Fluid Spraying)

Mix chamber (13) moves back, shutting off purge air flow. Impingement ports (IP) align with fluid ports of side seals (18c), allowing fluid to flow through mix chamber nozzle (N).

Key

Purge Air

Fluid

Cleanoff Air

Grease

NOTE: Flow paths are not shown to scale.

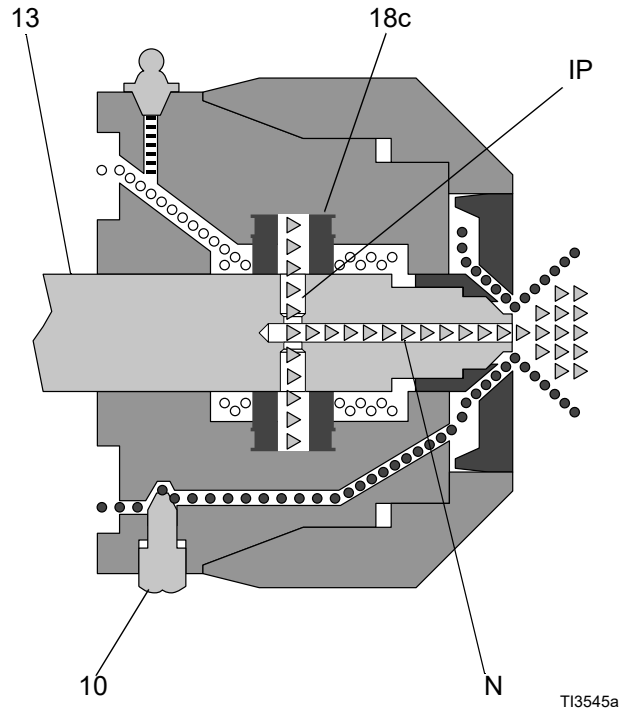

Gun Detriggered (Air Purging)

Mix chamber (13) moves forward, shutting off fluid flow. Impingement ports (IP) open to air chamber (AC), allowing purge air to flow through mix chamber nozzle (N).

Key

Purge Air

Fluid

Cleanoff Air

Grease

NOTE: Flow paths are not shown to scale.

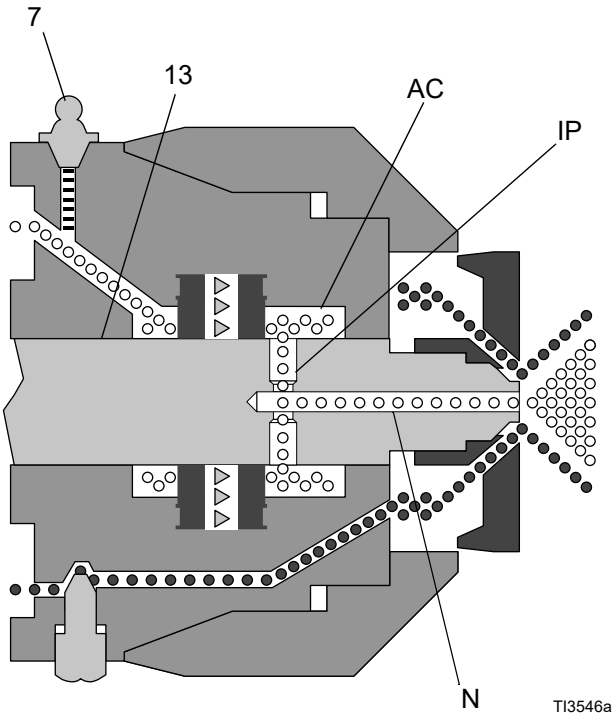

Grounding Instructions

(Flammable Flushing and Cleaning Materials)

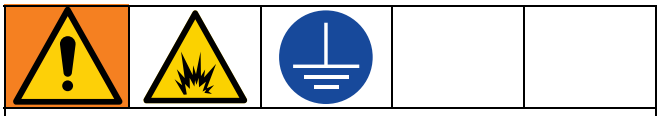

This equipment must be grounded to reduce the risk of static sparking. A static spark can cause fumes to ignite or explode causing serious injury. A good ground provides an escape wire for the electric current.

Position the striper so the wheels are on a true grounded surface, not on pavement or in the back of a trailer or a truck.

The striper is equipped with a grounding wire and clamp. The clamp must be connected to a true earth ground when flushing with flammable materials. See **Important Grounding Information**, page 3.

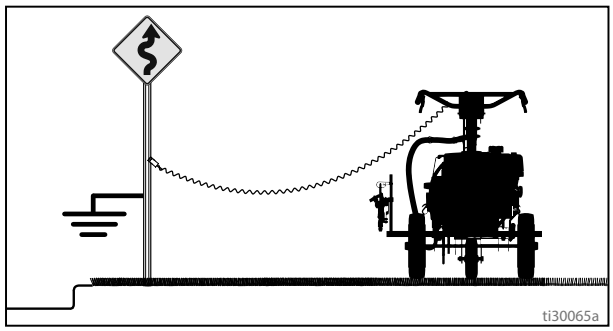

A metal sign post can be used as a true earth ground. Connect the grounding wire and clamp to a metal post. A properly grounded electrical outlet can also be used as a true earth ground. Use the provided adapter.

Fluid hoses: Use only electrically conductive hoses with a maximum of 300 ft. (91 m) combined hose length to ensure grounding continuity.

Spray gun: Grounded through connection to a properly grounded fluid hose and pump.

Pails

Flammable materials: follow local codes and regulations. Use only conductive metal pails, placed on a grounded surface such as concrete.

Do not place pail on a non-conductive surface such as paper or cardboard which interrupts grounding continuity.



Always ground a metal pail: connect a ground wire to the pail. Clamp one end to the pail and the other end to a true earth ground such as a water pipe.

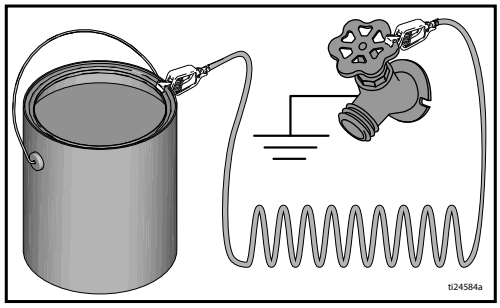

To maintain ground continuity when sprayer is flushed or pressure is relieved: hold metal part of spray gun firmly to the side of a grounded metal pail then trigger the gun.

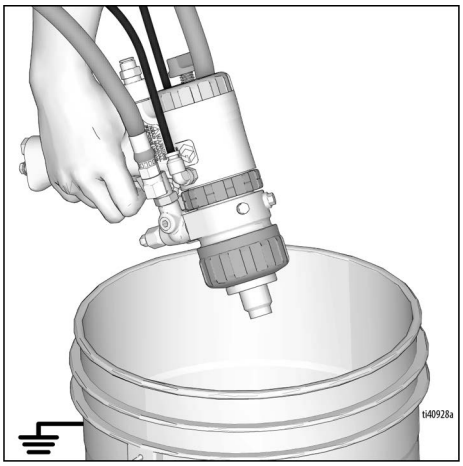

Pressure Relief Procedure

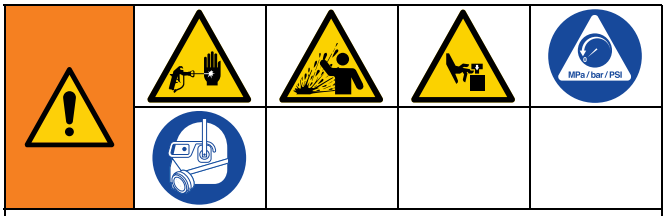

This equipment stays pressurized until pressure is manually relieved. To help prevent serious injury from pressurized fluid, such as skin injection, splashing fluid and moving parts, follow the Pressure Relief Procedure when you stop dispensing and before cleaning, checking, or servicing the equipment.

1. Perform **Grounding Instructions**, page 13.
2. Set both Pump ON/OFF Valves to **OFF**.

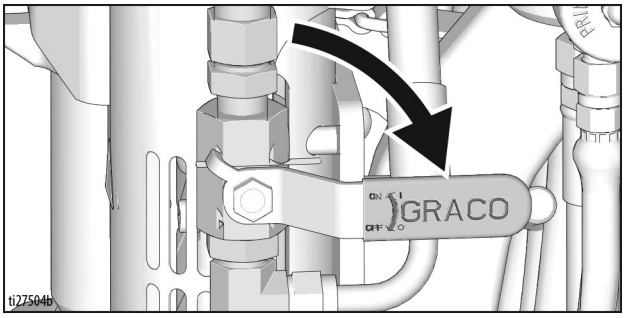

3. Turn Pressure Control to lowest setting.

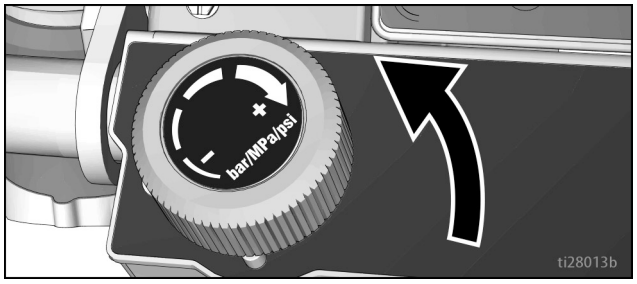

4. Close Fluid Valves A and B on the Gun Fluid Manifold with the provided 5/16” nut driver.

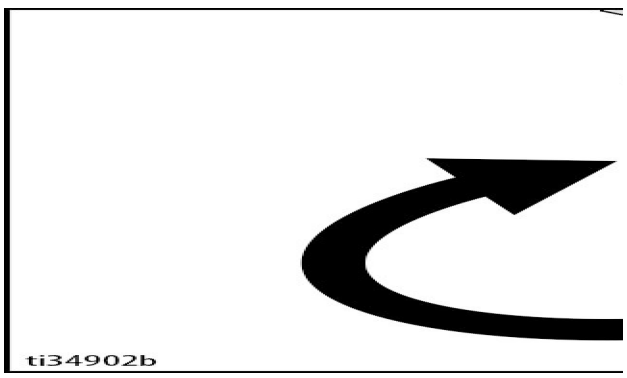

5. Trigger the gun onto cardboard or into a waste container to relieve pressure.
6. Engage all gun Piston Safety Locks. Turn both Prime Valves to prime positions.

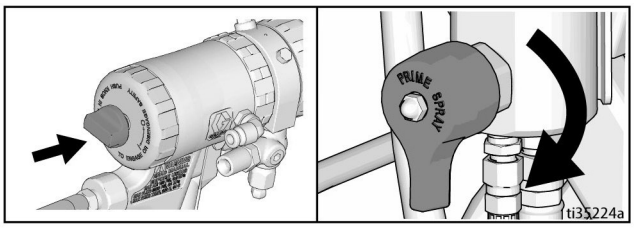

Clear Spray Tip Adapter Clog

7. If you suspect the Spray Tip Adapter (3) is clogged or that pressure has not been fully relieved:
   a. Repeat **Pressure Relief Procedure** steps 1-6.
   b. Remove the Spray Tip Adapter VERY SLOWLY.
   c. Clear the obstruction in the Spray Tip Adapter (3) and reinstall.

Clear Spray Tip Clogs



1. Release trigger. Engage Piston Safety Lock. Rotate Spray Tip (22). Disengage Piston Safety Lock and trigger gun to clear the clog.

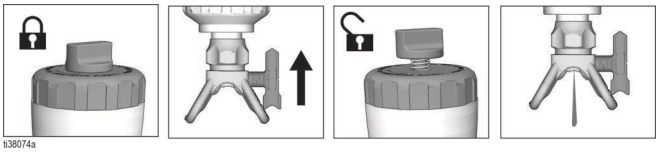

2. Engage Piston Safety Lock, return Spray Tip (22) to original position, disengage Piston Safety Lock and continue spraying.

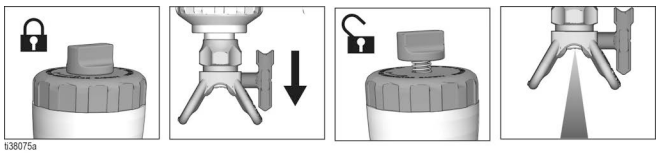

Setup

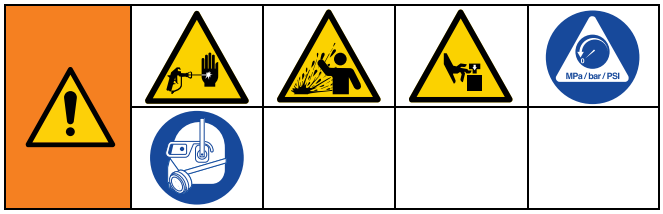

The ProConnect® (PC) Fluid Cartridge (20) comes pre-installed along with two spares for future use. See **Reinstall or Replace the PC Fluid Cartridge**, page 50, to learn when to replace the fluid cartridge.

Assemble the Spray Gun

1. Install the Mix Chamber (13).

   a. Lubricate the Fluid Housing (6) and Mix Chamber (13) sealing surfaces and ramp. See **Lubricant for Gun Rebuild**, page 90.

   b. Match A and B sides of the Mix Chamber (13) to corresponding sides of the Fluid Housing (6). Insert keyed end of the Mix Chamber into the socket on the Handle (8).

NOTE: The slot on the mix chamber should be facing downward.

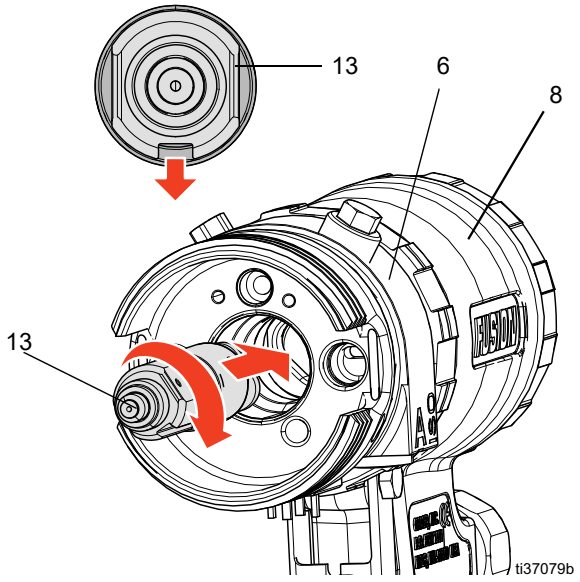

2. Engage the Piston Safety Lock (11). See **Piston Safety Lock**, page 11.

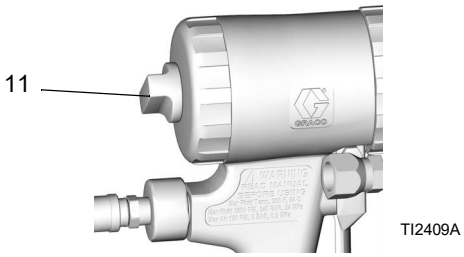

3. Install the PC Fluid Cartridge (20).

   a. Align the cartridge so it slides over the Mix Chamber (13) until the side seals engage the ramp.

   b. Press the PC Fluid Cartridge (20) onto the Mix Chamber (13). The fluid ports on the cartridge will engage the Fluid Housing (6). Resistance will be felt as the side seals are depressed.

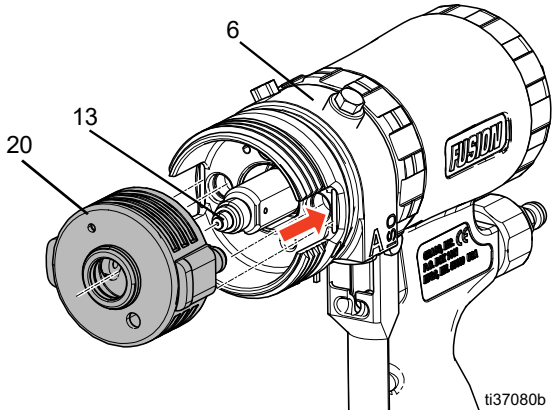

   c. Fully engage the PC Fluid Cartridge (20) into the Fluid Housing (6) until the back face of the cartridge is flush with the Fluid Housing.

4. Install the Front Retaining Ring (18).

   a. Lubricate the Front Retaining Ring (18). See **Lubricant for Gun Rebuild**, page 90.

   b. Tighten the Front Retaining Ring (18) until the PC Fluid Cartridge is fully engaged and secure in the Fluid Housing (6).

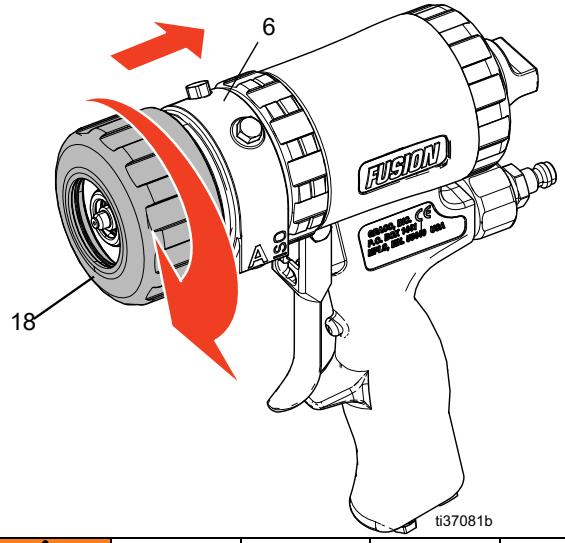



To prevent bodily injury or damage to the fluid o-ring from splashing chemical, verify that the PC Fluid Cartridge (20) is fully engaged into the Fluid Housing (6), and the Front Retaining Ring (18) is tight.

5. Install the Spray Tip Adapter (3).

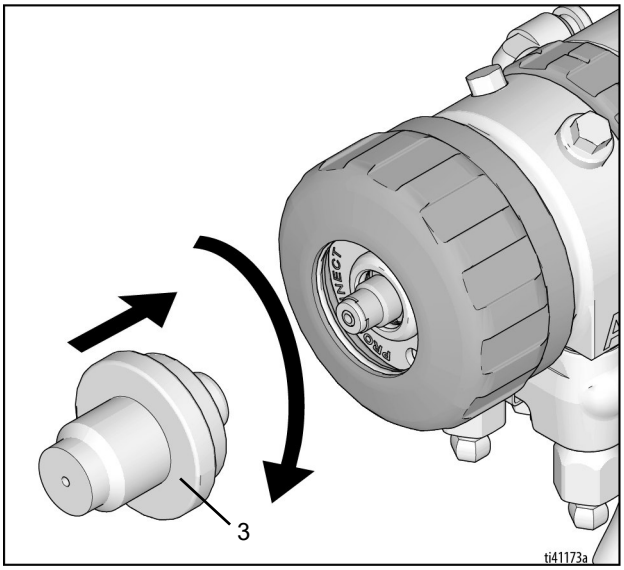

Setup Striper with Fusion MMA PC Gun

1. Perform **Pressure Relief Procedure**, page 14.

2. Fill throat packing nut with Throat Seal Liquid (TSL) to decrease packing wear.

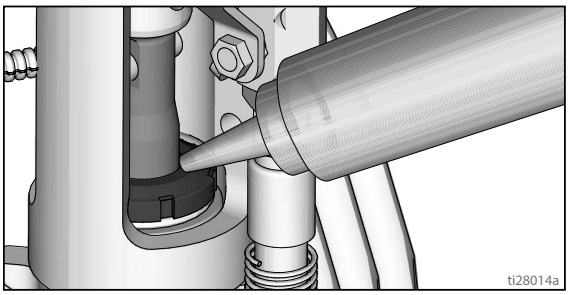

3. Check engine oil level and add oil if necessary. See Honda engine manual.

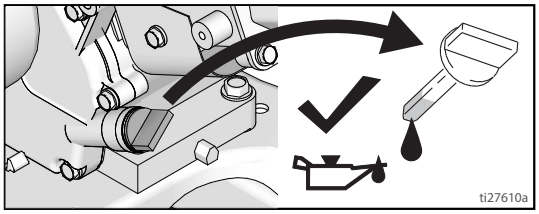

4. Fill fuel tank.

5. Set A and B side Pump ON/OFF Valves to **OFF**. Set proportioning valve to “non-proportioning.”

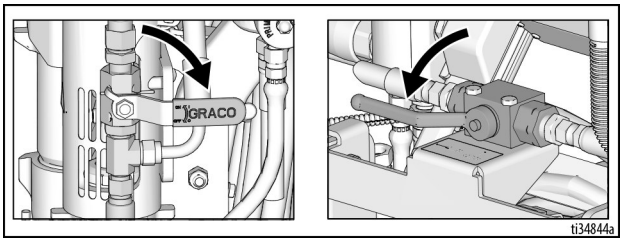

6. If removed, install strainers on both A and B suction tubes.

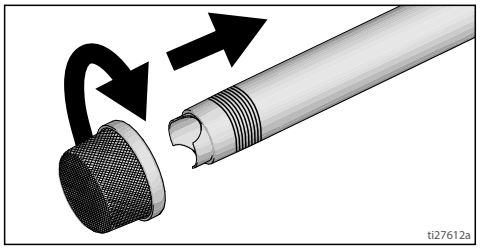

7. Turn both Prime Valves to prime. Turn Pressure Control counterclockwise to lowest pressure.

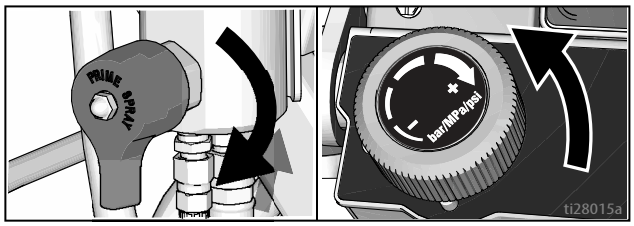

NOTE: Minimum hose size allowable for proper sprayer operation is 3/8 in. x 11 feet & 1/4 in. x 7 feet for LLV 200MMA.

8. Start engine:

   a. Move fuel valve to open.

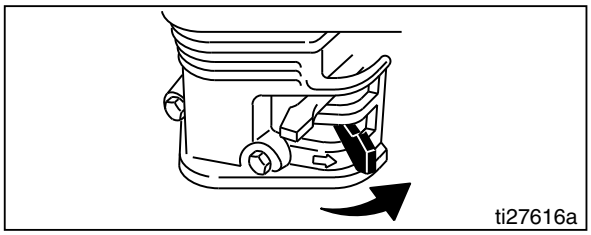

   b. Move choke to closed.

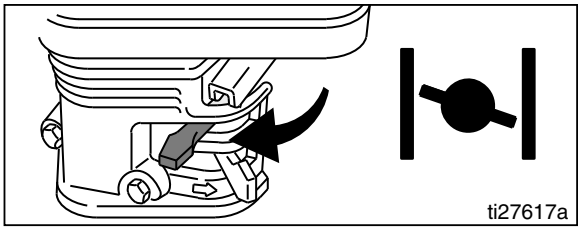

   c. Set throttle to fast.

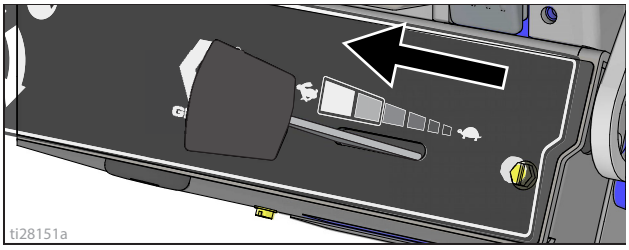

   d. Set engine switch to ON.

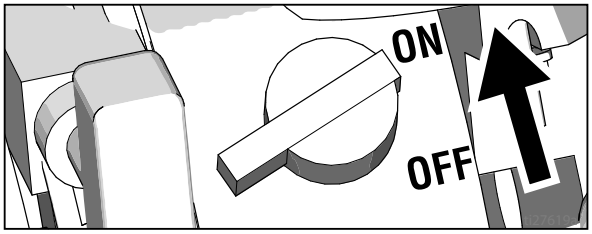

   e. Pull starter cord.

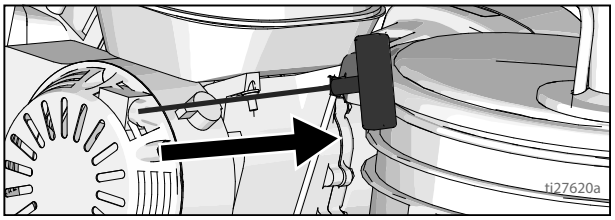

9. After engine starts, move choke to open.

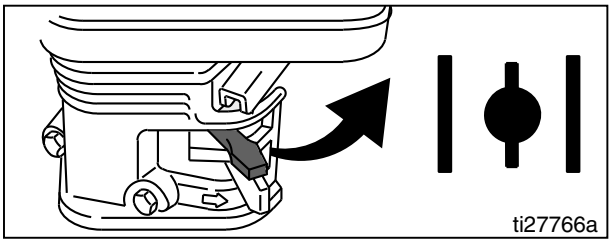

10. Set throttle to desired setting.

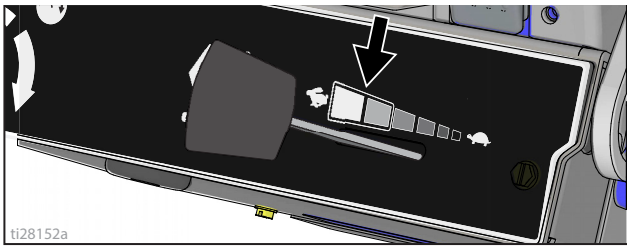

11. Digital Display is functional after engine starts.

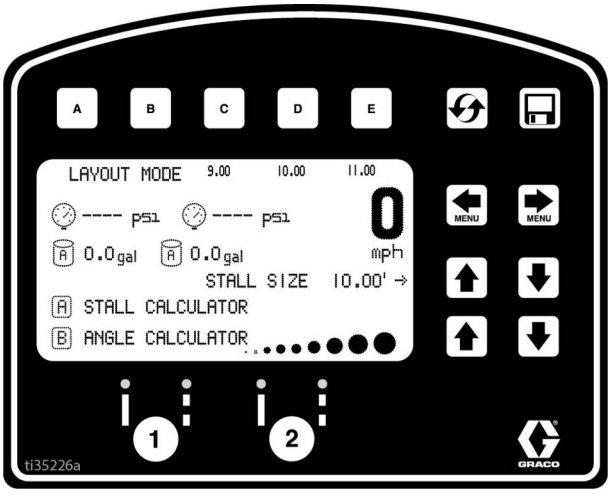

12. Mix BPO catalyst with component B per manufacturer's recommendation.

13. Place siphon tube in component B pail and drain tube in separate waste pail.

14. Set B side Pump ON/OFF Valve to **ON** (pump is now active).

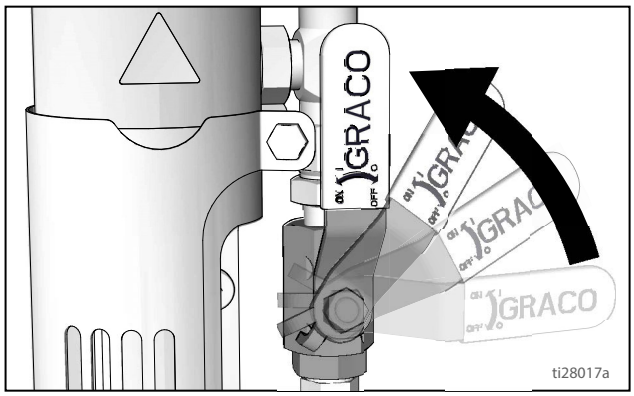

15. Increase Pressure Control enough to start pump. Pump is primed when fluid flows from drain tube.

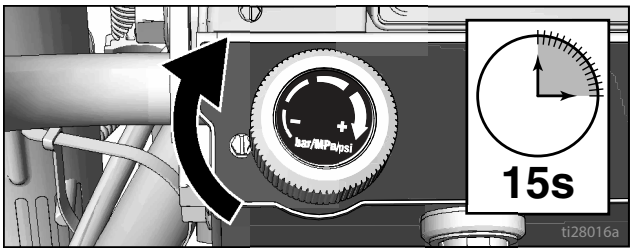

16. Turn pressure down, turn Prime Valve to spray.

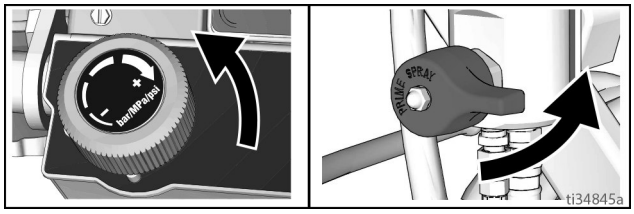

17. Return drain line to component B pail.

18. Engage Piston Safety Lock.

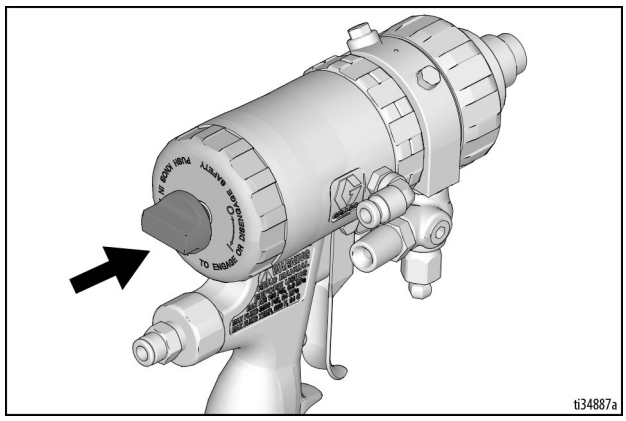

19. Open B side Fluid Valve (about three full turns).

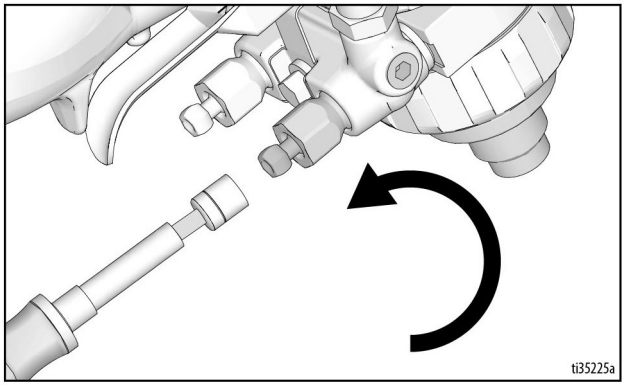

20. Disengage Piston Safety Lock.

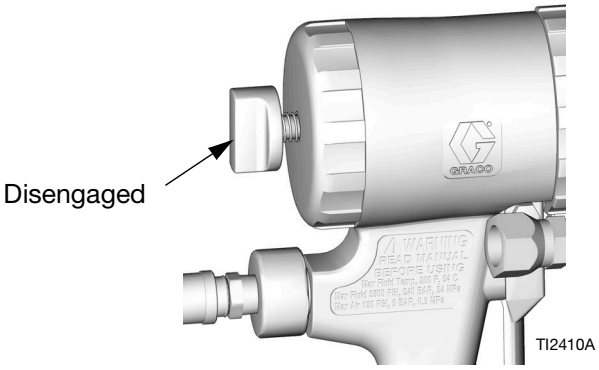

21. Hold gun against a grounded metal flushing pail. Trigger gun and increase fluid pressure slowly until pump runs smoothly.

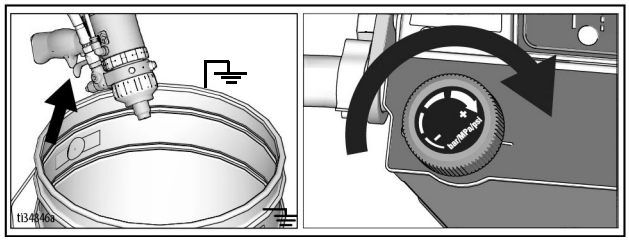



High-pressure spray is able to inject toxins into the body and cause serious bodily injury. Do not stop leaks with hand or rag.

22. If you suspect a clog, perform **Clear Spray Tip Adapter Clog**, page 14.

23. Inspect fittings for leaks. If leaks occur, turn sprayer OFF immediately. Perform **Pressure Relief Procedure**, page 14. Tighten leaky fittings. Repeat **Startup**, steps 1-22. If no leaks, continue to trigger gun until system is thoroughly primed. Proceed to step 26.

24. Perform **Pressure Relief Procedure**, page 14.

25. Close B side Fluid Valve on gun, and repeat step 14-23 for pump “A” with component A material.

26. Engage Piston Safety Lock. Use end of SwitchTip to press OneSeal into tip guard, with curve matching tip bore.

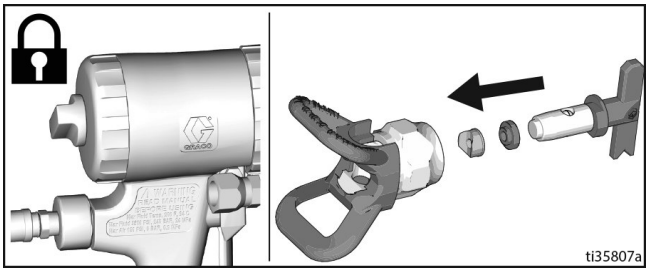



To avoid serious injury from skin injection, do not put your hand in front of the spray tip when installing or removing the spray tip and tip guard.

27. Insert SwitchTip in tip bore and firmly thread assembly onto gun.

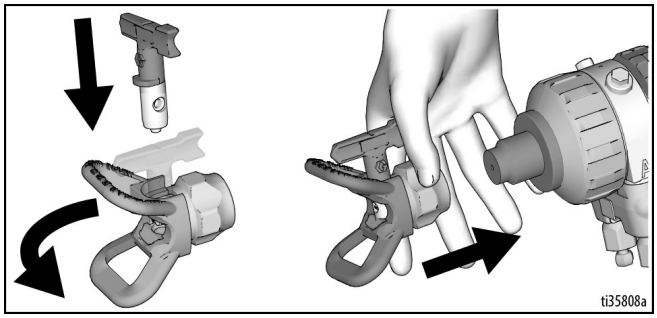

28. Open both A and B Fluid Valves.

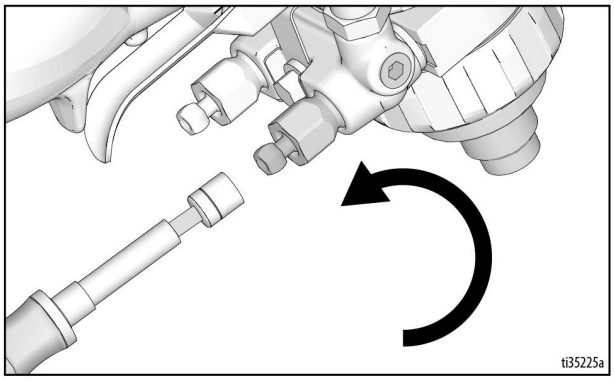

29. Disengage Piston Safety Lock.

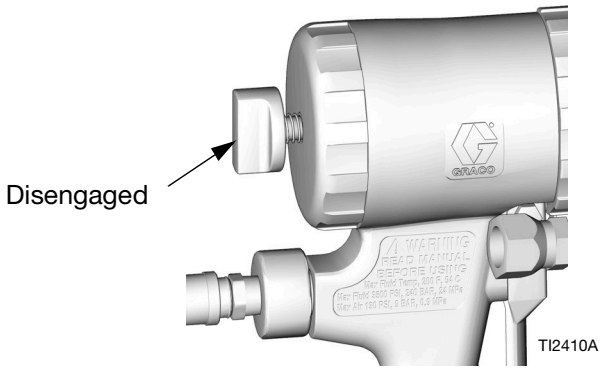

30. Turn both A and B Pump ON/OFF Valves to **ON.**

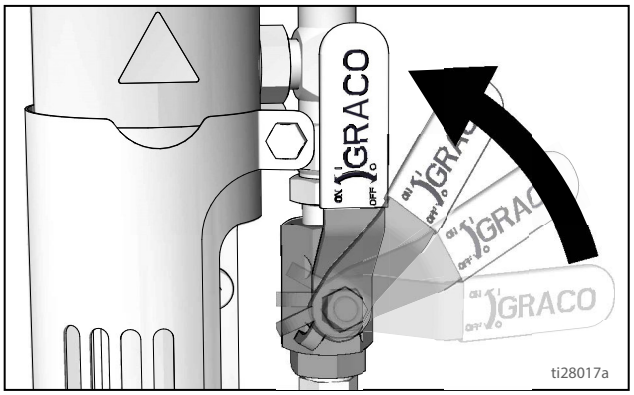

31. Turn proportioning valve to “proportion”.

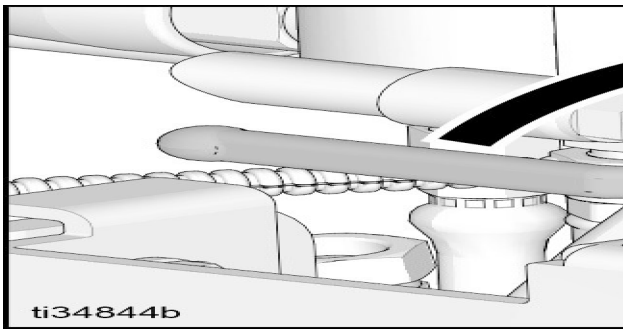

32. Increase pressure control knobs to desired pressure.

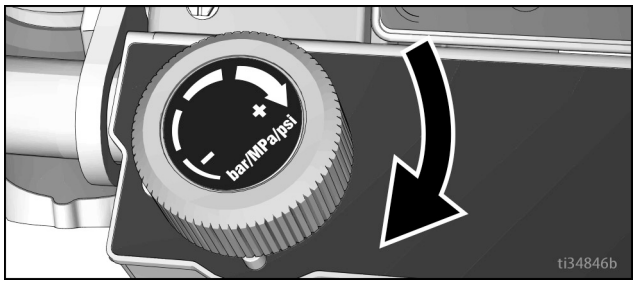

33. Test spray onto cardboard. Adjust pressure to achieve desired results. If you suspect the spray tip is clogged, perform **Clear Spray Tip Clogs**, page 14.

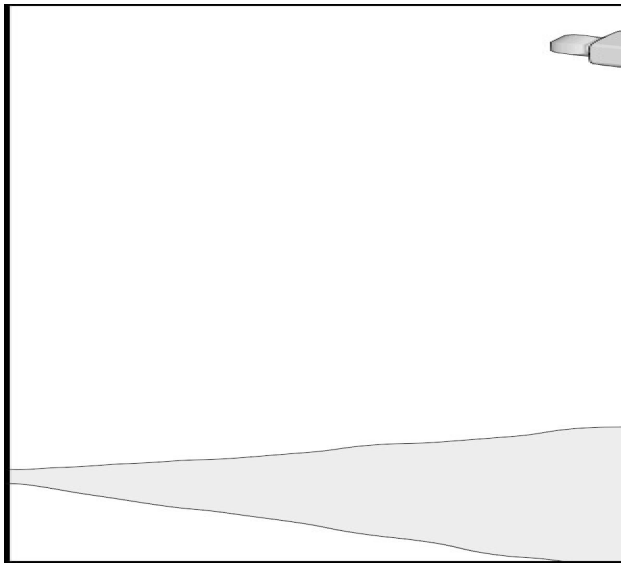

34. Open Purge Air Valve to purge mixed material from tip and spray tip adapter.

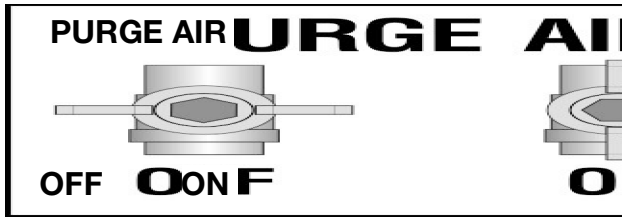

NOTICE

Purge Air Valve must be open to purge material from gun. Purging material maintains the gun's functionality and prevents hardened material in gun components.

You are now ready to spray!

Keep Components A and B Separate



Cross-contamination can result in cured material in fluid lines which could cause serious injury or damage equipment. To prevent cross-contamination:

- **Never** interchange component A and component B wetted parts.
- Never use solvent on one side if it has been contaminated from the other side.

Changing Materials

NOTICE

Changing the material types used in your equipment requires special attention to avoid equipment damage and downtime.

- When changing materials, flush the equipment multiple times to ensure it is thoroughly clean.
- Always clean the fluid inlet strainers on suction tubes after flushing.
- Check with your material manufacturer for chemical compatibility.

Startup

Gun Placement

1. If pressurized, perform **Pressure Relief Procedure**, page 14.

2. Insert guns into gun holder. Tighten clamps.

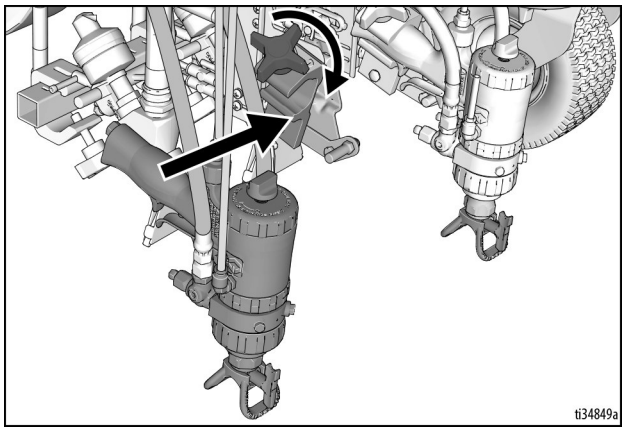

Position Gun

3. Position gun: up/down, forward/reverse, left/right. See **Gun Positions Chart**, page 23, for examples.

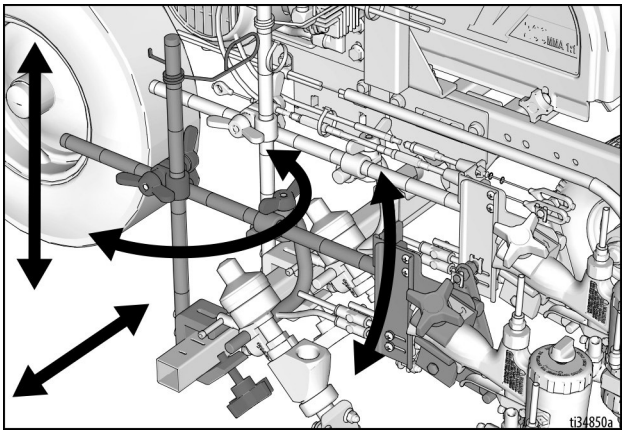

NOTE: When striping above a curb, the mounting clamp can be rotated for clearance.

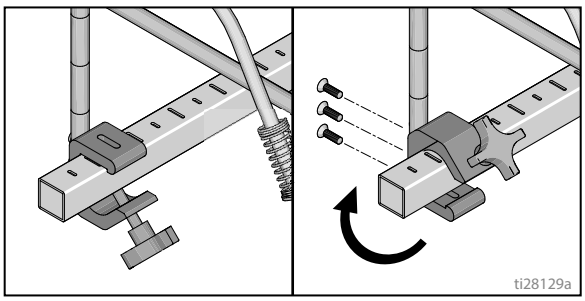

Manual Guns Selection

4. Connect gun cables to left or right gun selector plates.

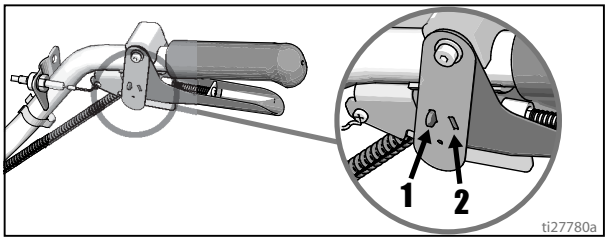

   a. One gun: Disconnect one gun selector plate from trigger.



   b. Both guns simultaneously: Adjust both gun selector plates to the same position.



Auto Guns Selection

1. Use the gun selector buttons to determine which guns are active. Each gun selector has 3 settings: continuous line, OFF, and programmed line pattern.

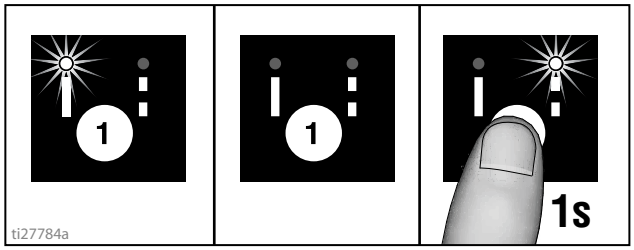

2. Use the gun trigger control to actuate guns.

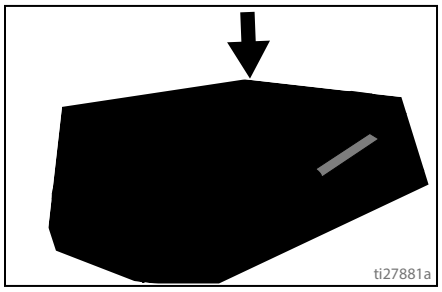

4 Examples:

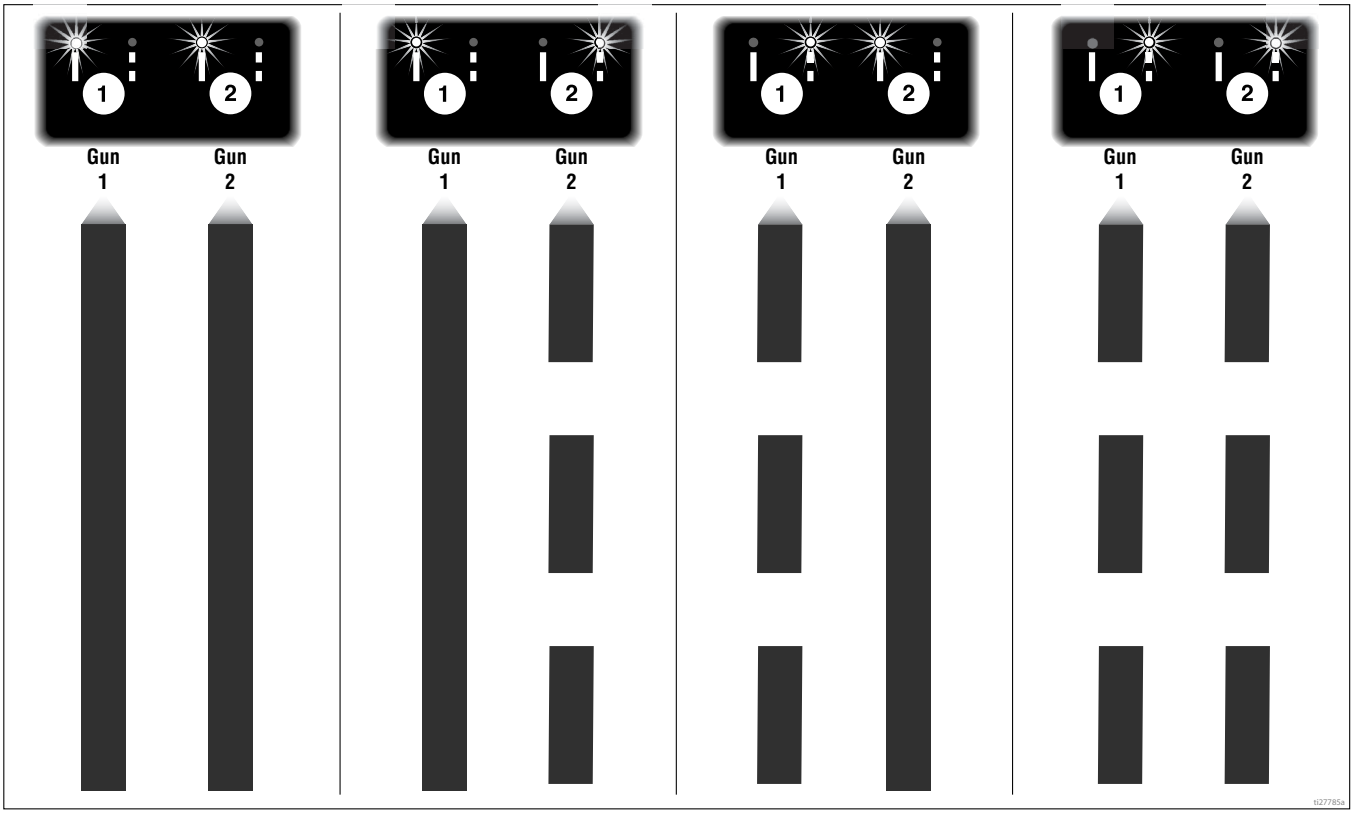

Gun Positions Chart

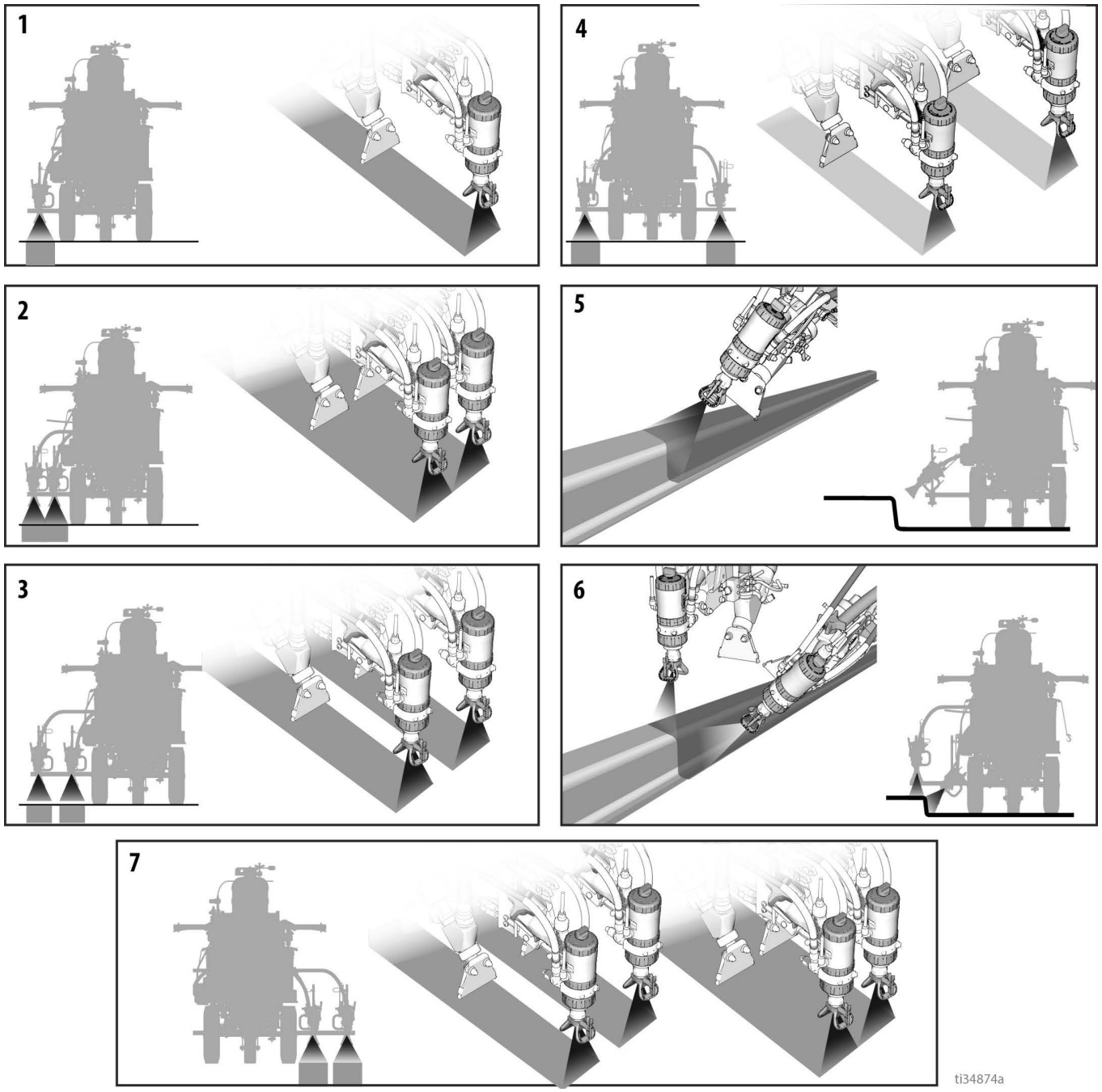

1	One line
2	One line up to 24 in. (61cm) wide
3	Two lines
4	One line or two lines to spray around obstacles
5	One gun curb
6	Two gun curb
7	Two lines or one line up to 24 in. (61 cm) wide

Gun Arm Mounts

This unit is equipped with front and rear gun arm mounts to allow the operator to place the guns in the optimal location.

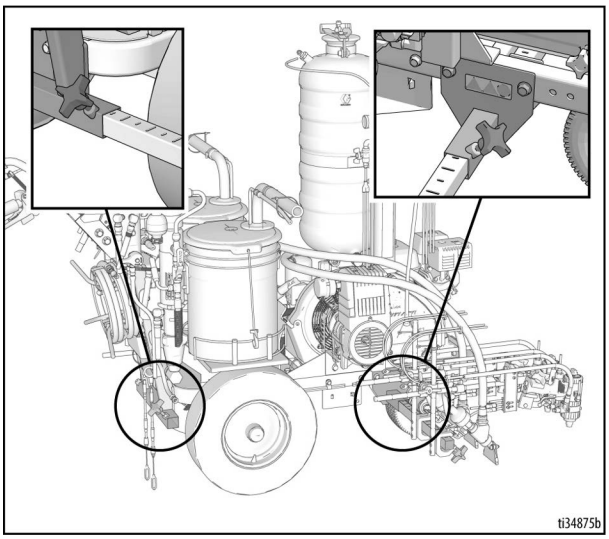

Change Gun Position (Front and Back)

1. Loosen gun arm knob and remove from gun arm mounting slot.

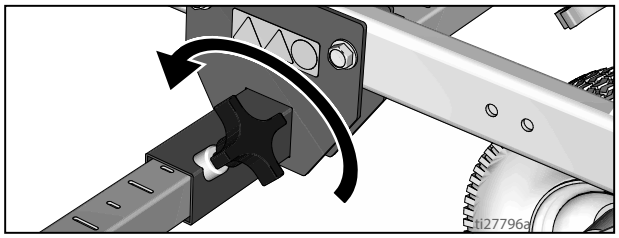

2. Slide gun arm assembly (including gun and hoses) out from gun arm mounting slot.

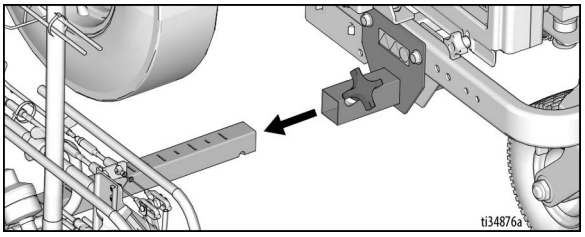

3. Slide gun arm assembly into desired gun arm mounting slot.

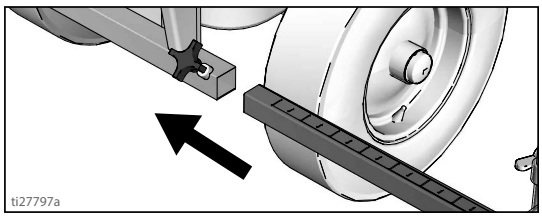

4. Tighten gun arm knob into gun arm mounting slot.

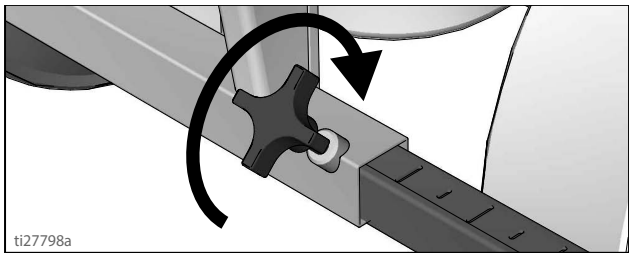

NOTICE

Make sure all hoses, cables, and wires are properly routed through brackets and do NOT rub on tire. Contact with tire will result in damaged hoses, cables, and wires.

Change Gun Position (Left and Right)

Removal

1. Loosen vertical gun arm knob on gun arm mounting bar and remove.

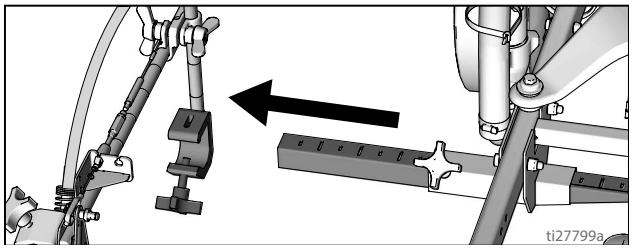

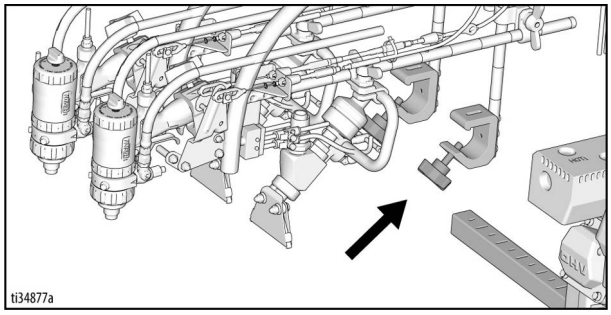

2. Extend mounting bar on opposite side of the machine.

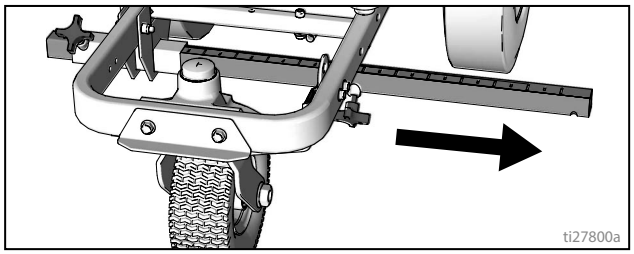

Installation

1. Install vertical gun mount onto gun bar.

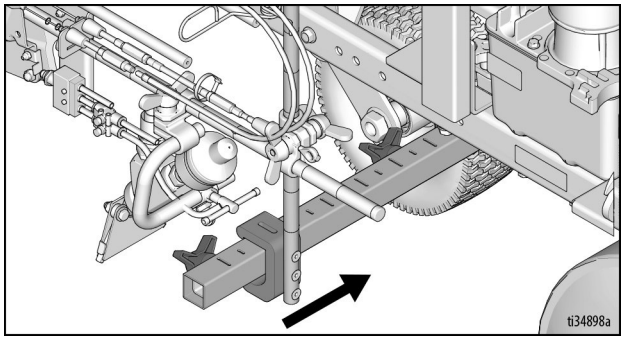

NOTE: Make sure all hoses, cables, and wires are properly routed through brackets.

Trigger Sensor Adjustment

1. Start striper engine. Manually pull the trigger. Spray icon should appear simultaneously with start of fluid spray.

HP Auto Series

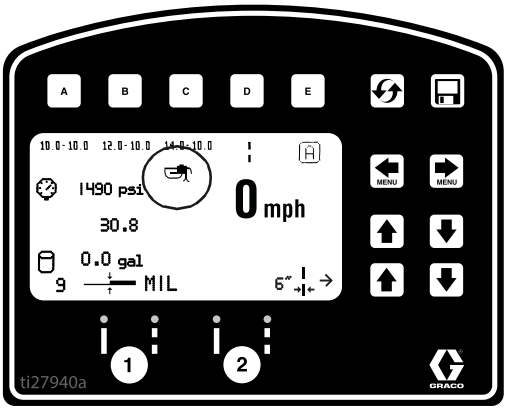

No fluid spray

2. Turn screw in handle clockwise if spray icon appears before fluid spray starts.

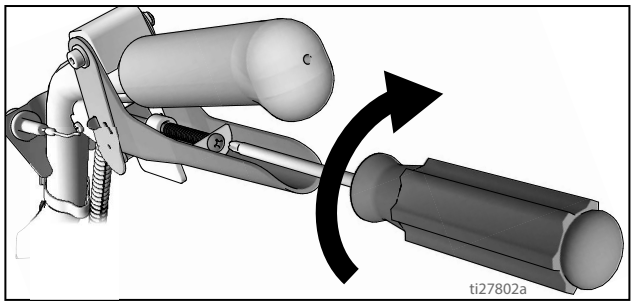

No spray icon

3. Turn screw in handle counterclockwise if fluid spray starts before spray icon appears.

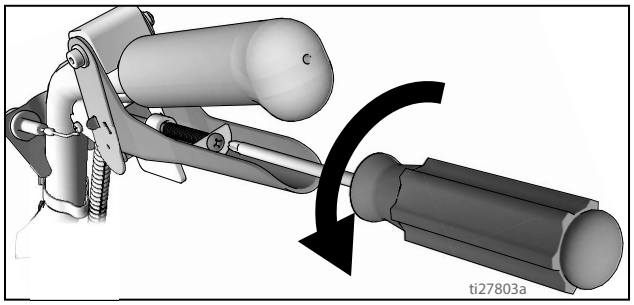

4. Continue adjusting screw in handle until timing of spray icon and fluid spray are synchronized.

Gun Cable Adjustment

Adjusting the gun cable will increase or decrease the gap between the trigger plate and the gun trigger. To adjust trigger gap, perform the steps below.

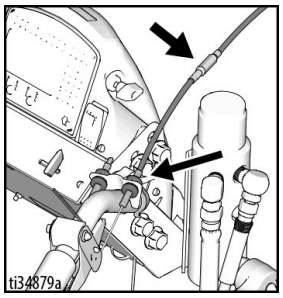

Manual Guns

Auto Guns
(has 2 locations)

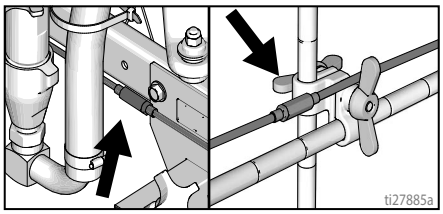

1. Use wrench to loosen locking nut on cable adjuster.

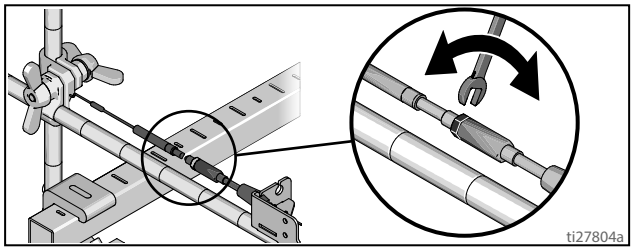

2. Loosen or tighten adjuster until desired result is achieved. **NOTE:** More thread exposed means less gap between gun trigger and trigger plate.
3. Use wrench to tighten locking nut on the adjuster.

Adding Gun Cable (Auto Gun)

The HP Auto Series can be equipped with two Gun Actuators. Each Gun Actuator is capable of operating one cable.

1. Select cable end with adjuster.
2. Install exposed cable through cable bracket slot.

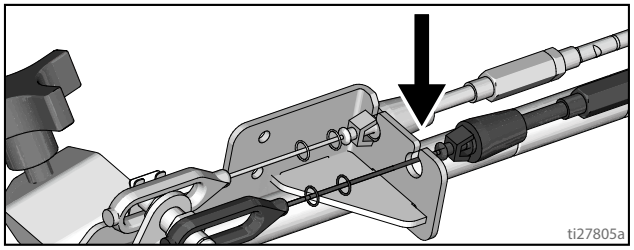

3. Insert plastic cable retainer into cable bracket hole.

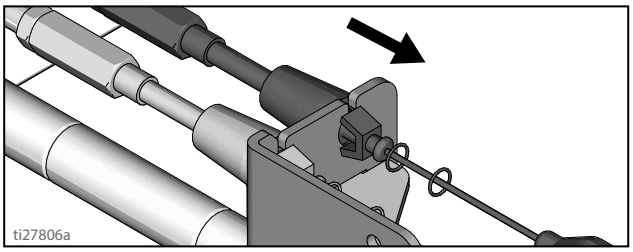

4. Install cable end onto trigger plate pin and install clip.

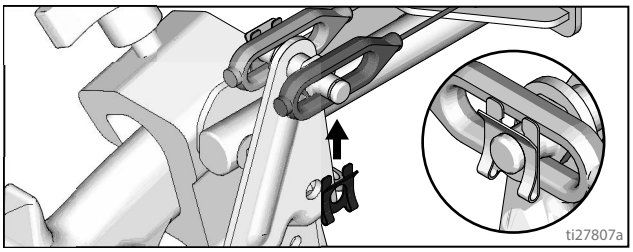

5. Route cable around unit and up through cable holes behind hose mount.

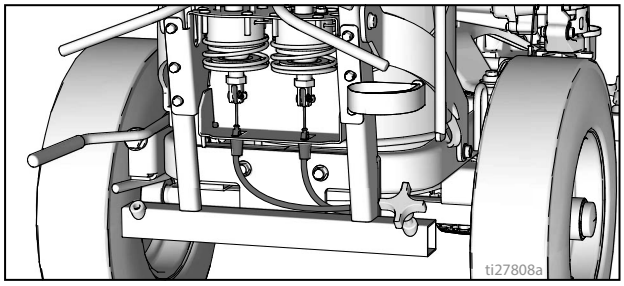

6. Route cable end loop through rectangular hole in bracket and insert plastic cable retainer into the actuator bracket. Install cable end onto actuator rod and install pin.

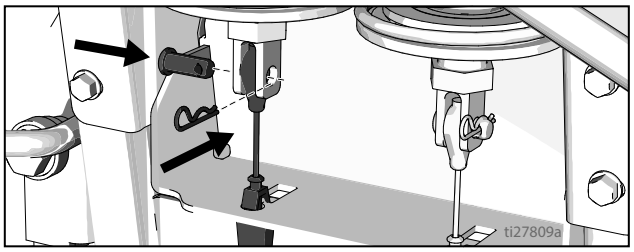

Straight Line Adjustment

The front wheel is set to center the unit and allows the operator to form straight lines. Over time, the caster wheel may become misaligned and will need to be readjusted. To re-center the front caster wheel, perform the following steps:

1. Loosen bolt on the front wheel bracket.

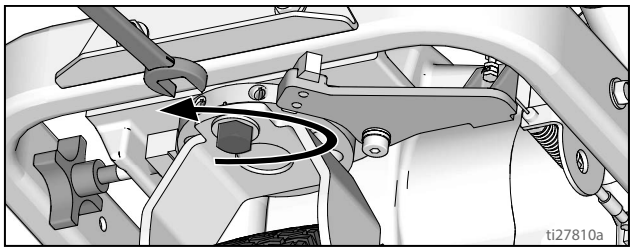

2. If striper arcs to the right, loosen left set screw and tighten right set screw for fine tune adjustment.

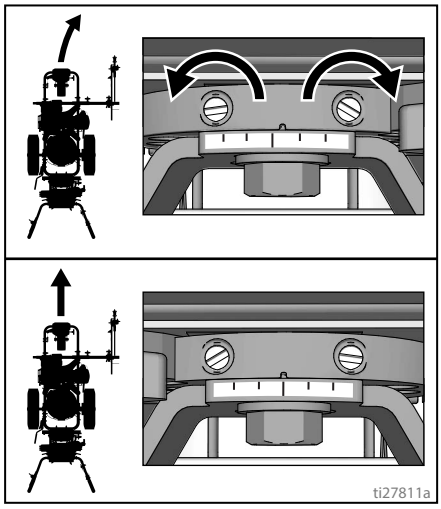

3. If striper arcs to the left, loosen right set screw and tighten left set screw.

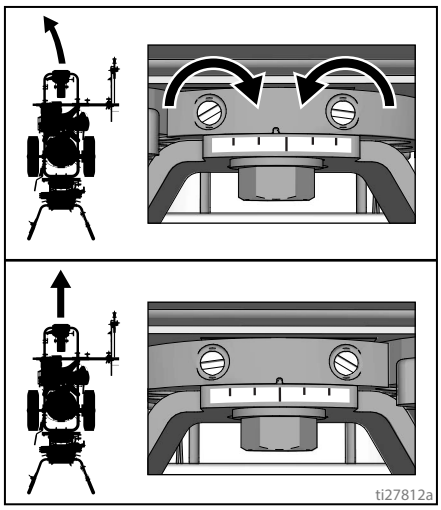

4. Roll the striper. Repeat steps 2 and 3 until striper rolls straight. Tighten bolt on wheel alignment plate to lock the new wheel setting.

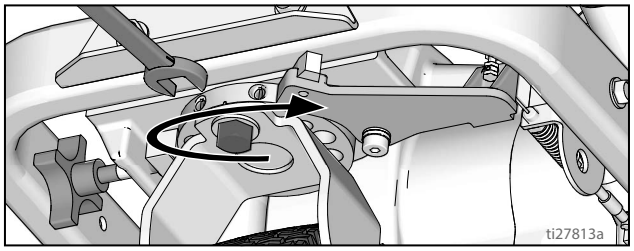

Handle Bar Adjustment

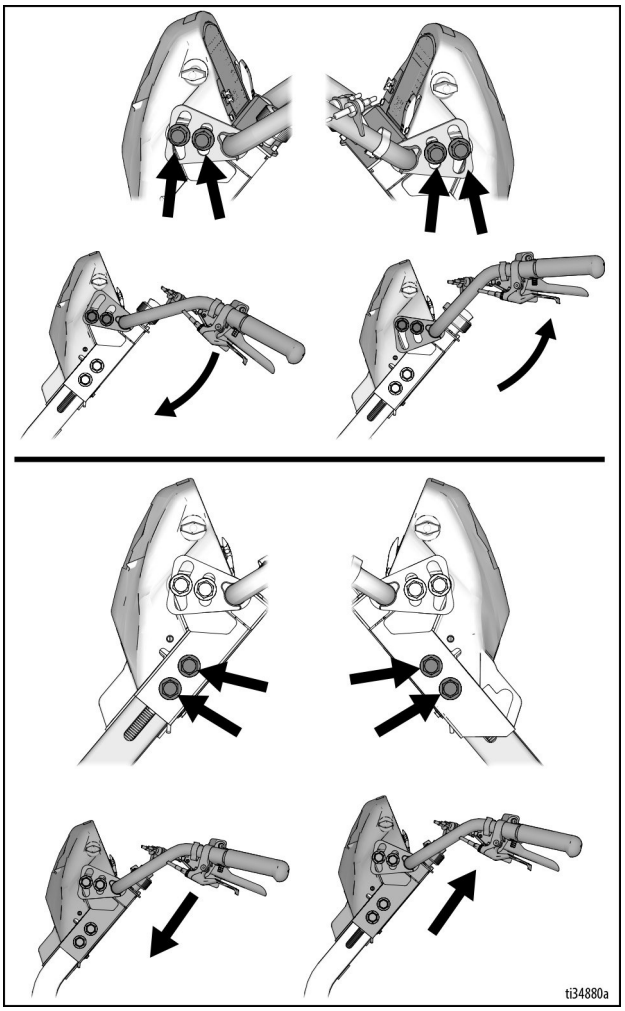

Dot Laser

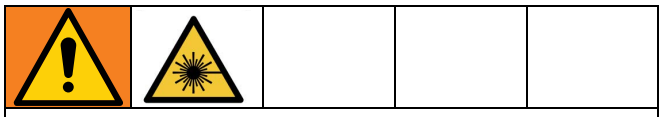

To avoid injury, never look firectly in to laser beam.

1. Remove battery cover.

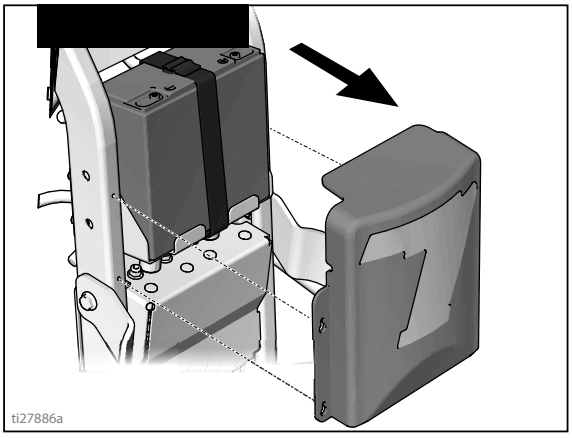

2. Attach ON/OFF switch to desired location on the handle bar.

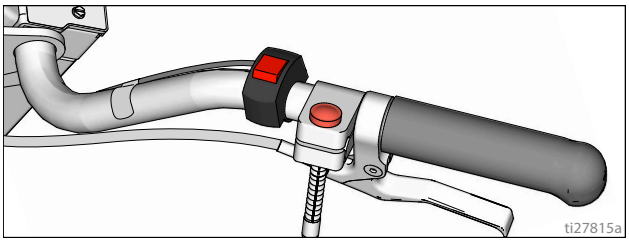

3. Attach laser to desired location on the gun arm.

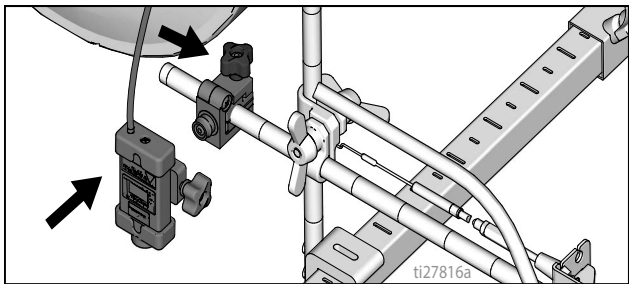

4. Route wires from the switch to the Battery and connect to the (+) and (-) terminals.

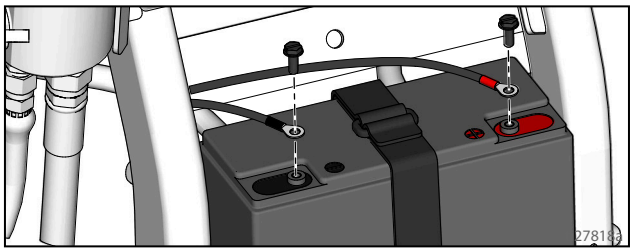

5. Connect the switch leads to the wire harness.

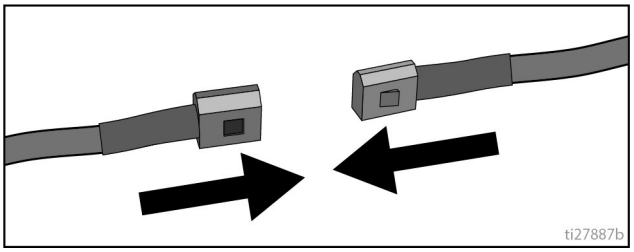

6. Reattach battery cover.

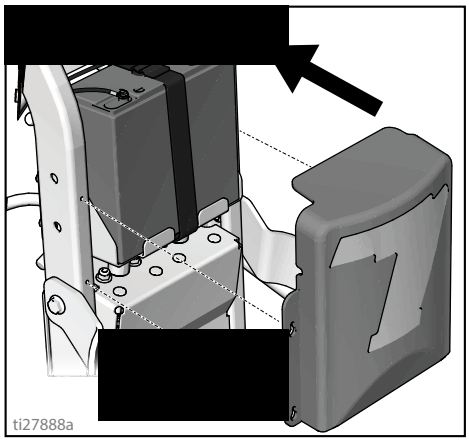

7. Turn on laser and position dot underneath gun head.

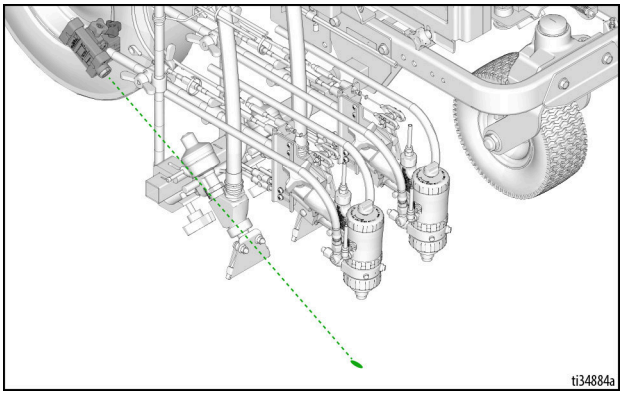

Cleanup

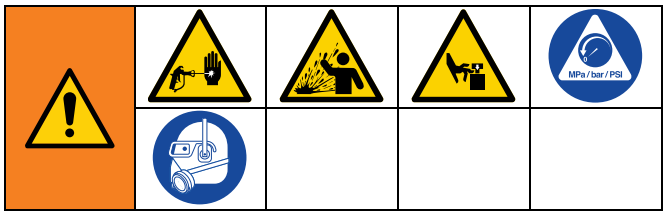

1. Perform **Pressure Relief Procedure**, page 14.
2. Remove guard and tip from all guns and place in acetone.

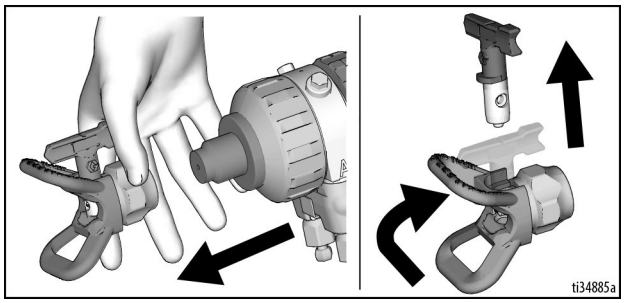

3. For both Filter Manifolds, unscrew cap, remove filter, and assemble without filter.

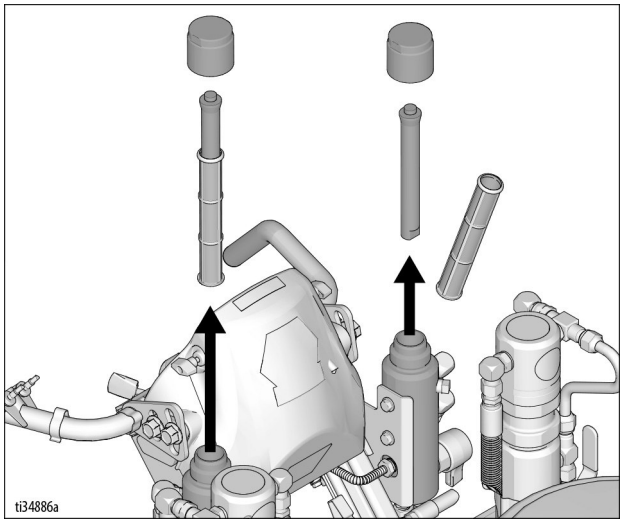

4. Set the Proportioning Valve to “non-proportioning”.

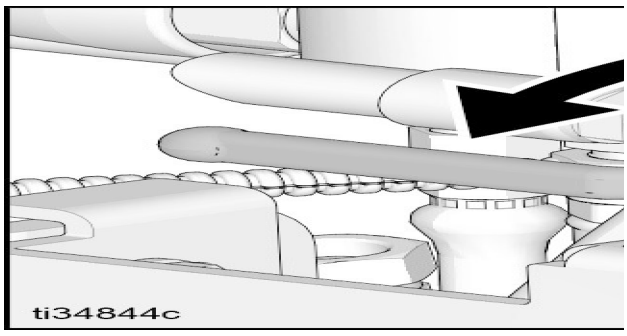

5. Place B side siphon tube set in grounded metal pail partially filled with acetone. Attach ground wire to true earth ground.
6. Set B side Pump Valve to **ON** (pump is now active).

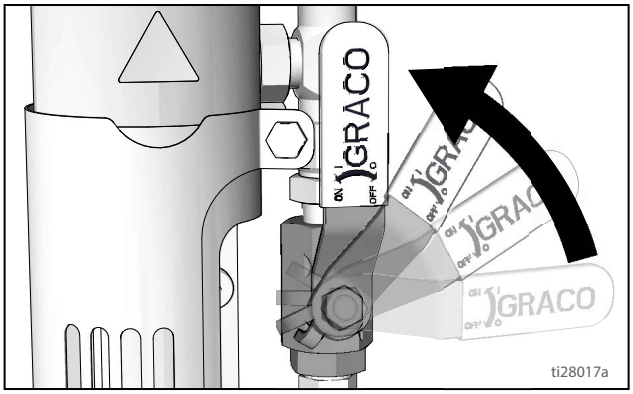

7. Increase Pressure Control enough to start pump. Pump is flushed when solvent flows from drain tube.

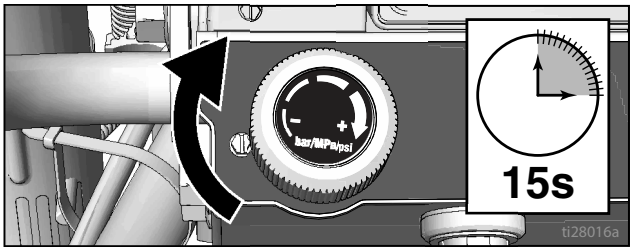

8. Turn pressure down, turn Prime Valve to spray.

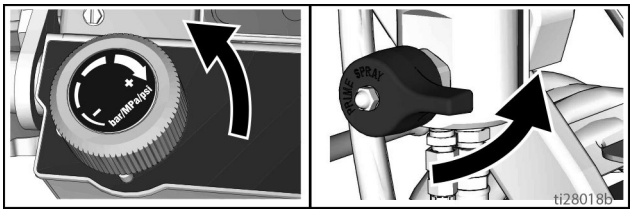

9. Return drain line to component B pail.
10. Engage Piston Safety Lock.

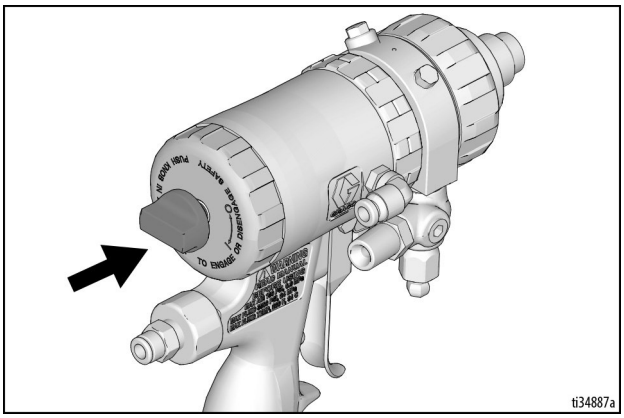

11. Open B Fluid Valve (about three full turns).

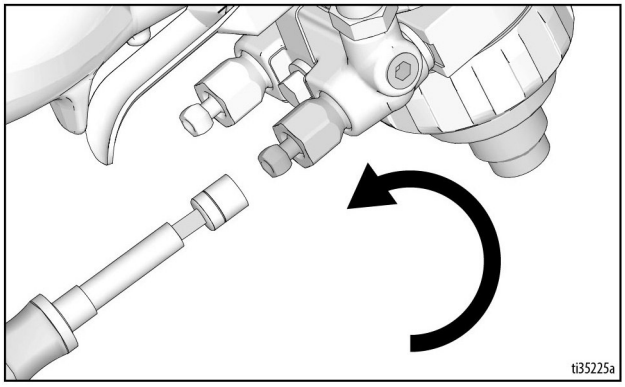

12. Disengage Piston Safety Lock.

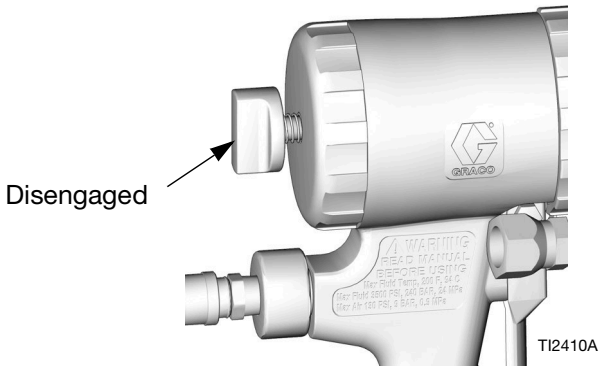

13. Hold gun against a grounded metal flushing pail. Trigger guns and increase fluid pressure slowly until pump runs smoothly.

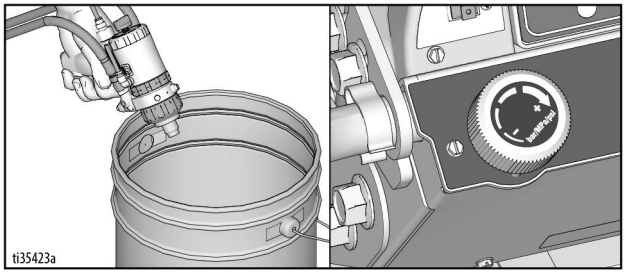

14. Close B Fluid Valve, turn B Pump Valve OFF. Repeat steps 4-12 for A side pump and gun.

15. Clean mixing chamber, tip, and tip guard in acetone fluid.

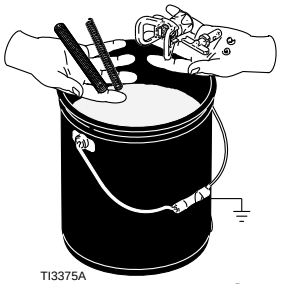

FLUSH

16. Fill pump with Pump Armor and reassemble filter, guard and tip.

17. Remove hose manifold, see **Table 1: Nozzle Drill Bit Sizes**, page 47.

18. **Disassemble Front End of Fusion MMA PC Gun**, page 56, step 3.

19. **Maintenance - LineLazer V 200MMA 1:1**, page 57, steps 6-8, place in acetone.

20. Lubricate o-rings, see **Clean Muffler**, page 54.

21. **Maintenance - LineLazer V 200MMA 1:1**, page 57, step 5, place in acetone with tips and Spray Tip Adapter.

22. Lubricate o-rings, see **Clean Muffler**, page 54.

23. **Inspect the Check Valves**, page 47.

24. **Reassemble Front End of Fusion MMA PC Gun**, page 56.

25. Reinstall hose manifold, see **Table 1: Nozzle Drill Bit Sizes**, page 47.

26. Each time you spray and store, fill throat packing nut with TSL to decrease packing wear.

Daily shutdown

1. Perform **Pressure Relief Procedure**, page 14.
2. Close Fluid Valves A and B on the hose manifold with the provided 5/16” nut driver.

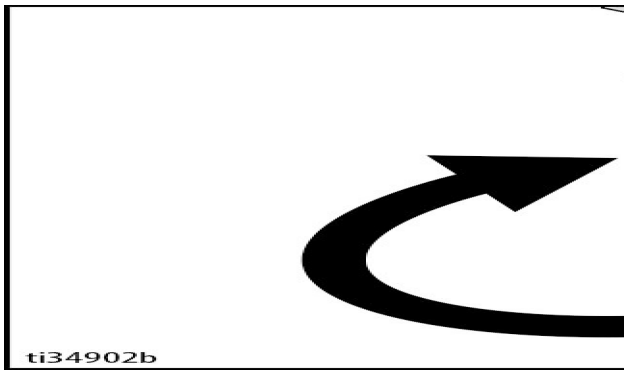

3. Leave Purge Air Valve turned on and gun detriggered while machine is still running.

NOTE: Grease gun daily to prevent two component curing and keep fluid passages clean. Purge air carries grease mist through air chamber (AC), impingement ports (IP), and out mix chamber nozzle (N), coating all surfaces. Use Graco 117773 Grease, see page 90.

NOTE: Flow paths are not shown to scale, for clarity. See Parts List, pages 74-75, for part numbers and reference locations.

Key

Purge Air

Fluid

Cleanoff Air

Grease

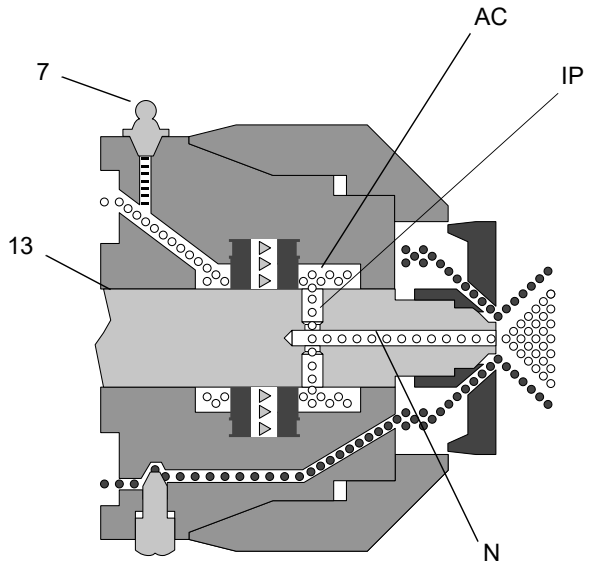

4. Remove Grease Fitting cap (37). Using grease gun, dispense grease into fitting (25) until grease mist sprays from mix chamber nozzle (N). Do not over-grease; use 2 shots maximum. Do not spray grease mist on sprayed material.

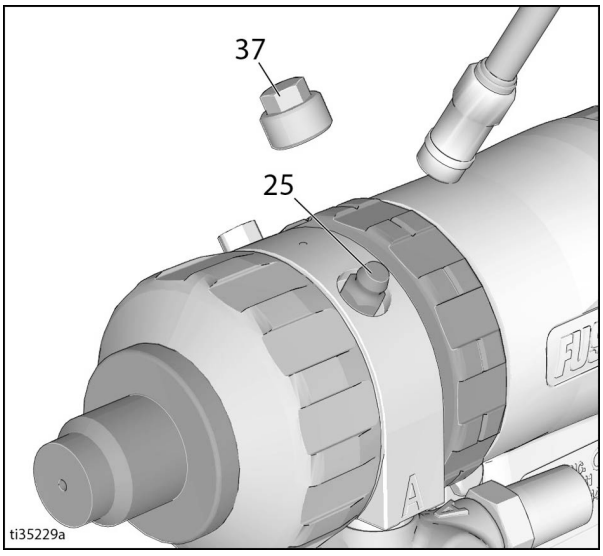

5. Replace grease cap (37).

LineLazer V LiveLook Display

HP Auto Series

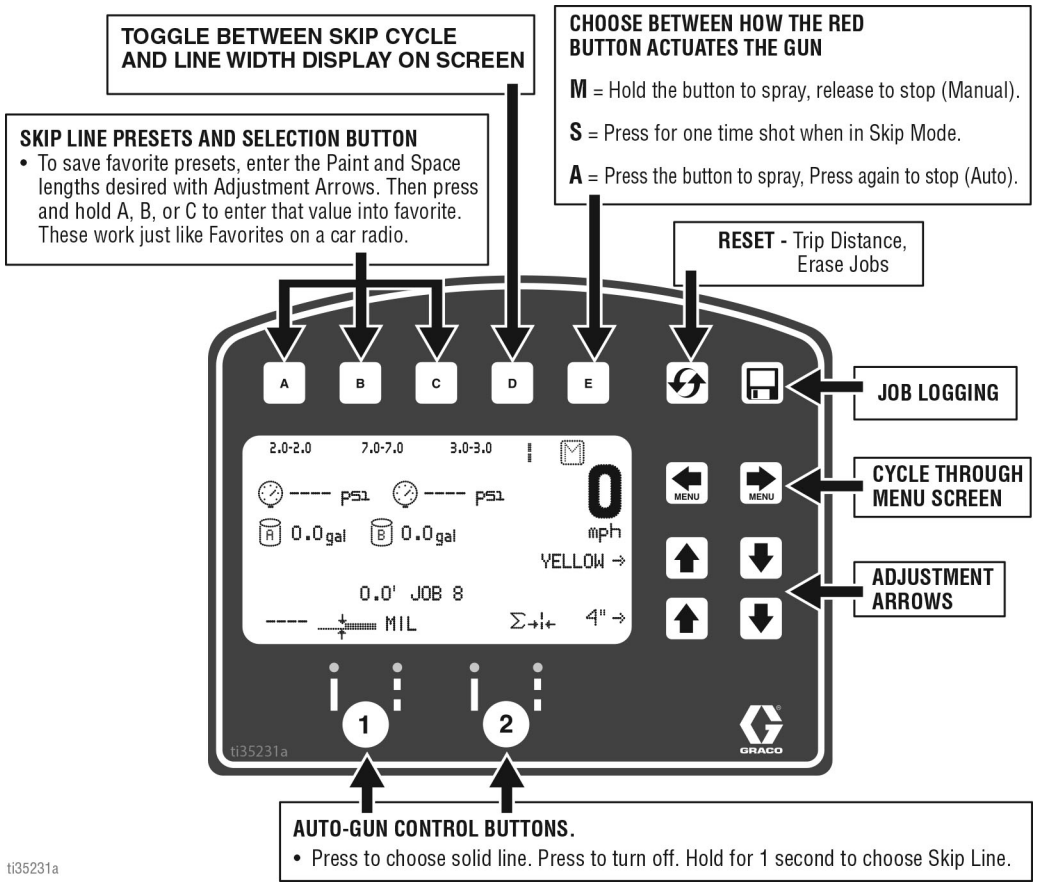

STRIPING SCREEN

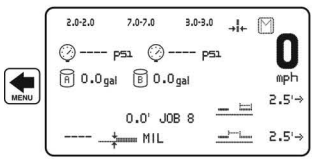

- **Main striping screen.** Must be in this mode to electronically actuate guns.
- Automatic Skip Cycles can be laid from this screen. Choose skip line on the desired gun to fire. Enter the Paint and Space distance wanted and begin spraying.
- Press the E Button to choose how the red button actuates the guns.

M = Hold to spray, release to stop
S = Press for one time shot when in Skip Mode.
A = Press to start , press to stop

MEASURE MODE

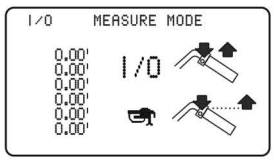

- **Measure Mode.** Ability to take up to 6 measurements by pressing the red button to start the measurement and pressing it again to end the measurement.
- If an Auto Gun is selected (see below) and the red button is held down, a dot will be dropped every 12" until the red button is released.

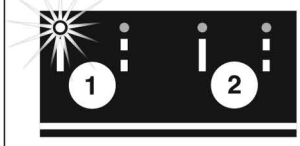

LAYOUT MODE

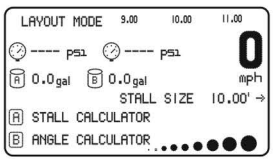

- **Layout Mode.** Drop a dot at a chosen distance to layout a parking lot.
- Enter stall size, activate an auto gun, press the red button, and roll the machine. To stop dotting, press the red button again. Favorites can be saved just like in the main screen.

Ⓐ STALL CALCULATOR
see page 38

Ⓑ ANGLE CALCULATOR
see page 39

SETTING/INFO

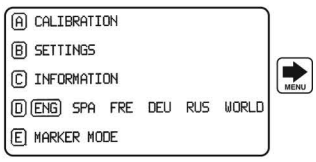

- Settings and Information can be accessed from this screen.
- For accurate distance calculations the machine must be calibrated. Press A to calibrate the machine. Use a distance of at least 25' or more.

ti35232a

Initial Setup (HP Auto Series)

The initial setup prepares the striper for operation based on a number of user entered parameters. Language selections and the units of measure selections can be set before you start or changed later.

Language

From Setup/Information select appropriate language by pressing [D] until the language is outlined.

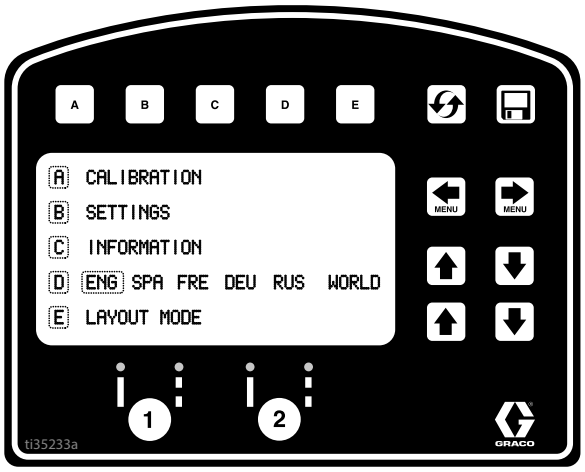

ENG = English
SPA = Spanish
FRE = French
DEU = German
RUS = Russian
WORLD = Symbols see **World Symbol Key**, page 93

NOTE: Language can be changed later.

Units

Press [B] to enter settings and then [B] again to enter units. Select appropriate units of measure.

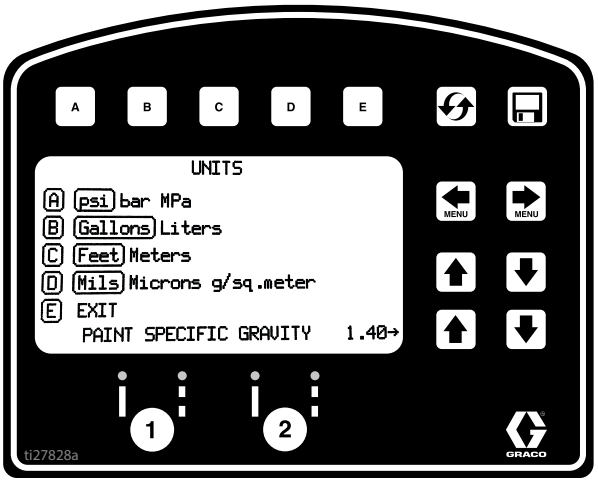

US Units
- Pressure = psi
- Volume = gallons
- Distance = feet
- Line Thickness = mil

SI Units
- Pressure = bar (MPa available)
- Volume = liters
- Distance = meters
- Line thickness = micron (g/m^2 available)

Paint Specific Gravity = Use UP and DOWN arrows to set specific gravity. Required to determine paint thickness.

NOTE: All units can be changed individually at any time.

Calibration

1. Check rear tire pressure 55 ± 5 psi (379 ± 34 kpa) and fill if necessary.
2. Extend steel tape to distance greater than 26 ft. (8m).

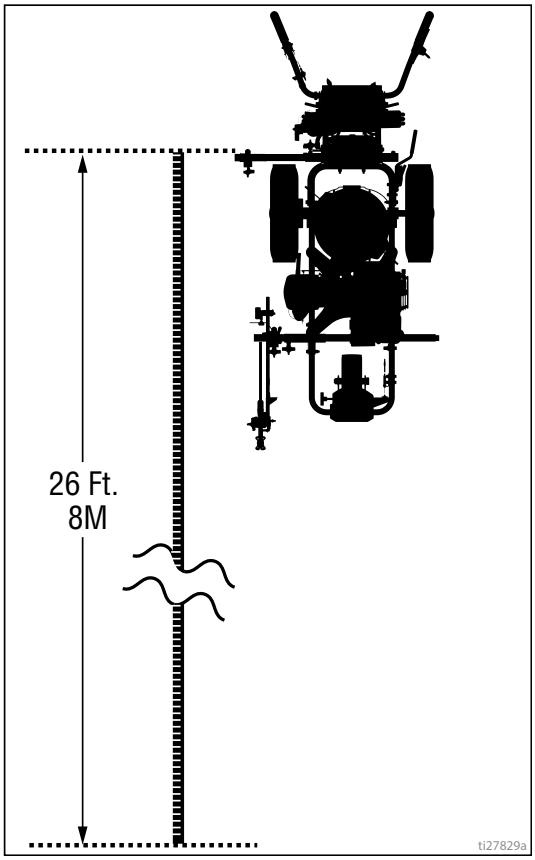

3. Press [MENU] [MENU] to select Setup/Information.

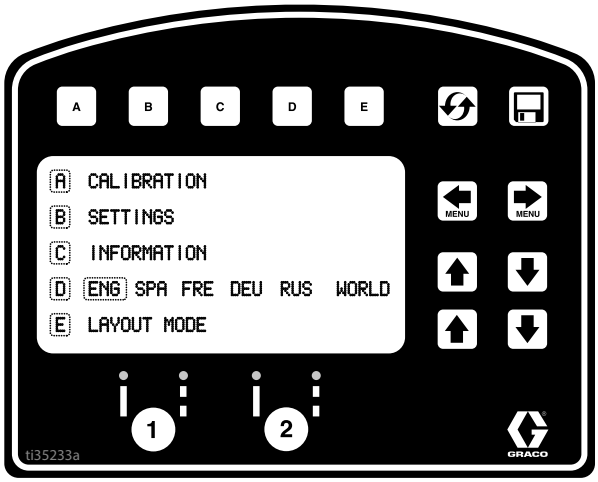

4. Press [A] for Calibration. Set TRAVEL DIST to 25 ft (7.6m) or longer. Longer distances ensure better accuracy, depending on conditions.

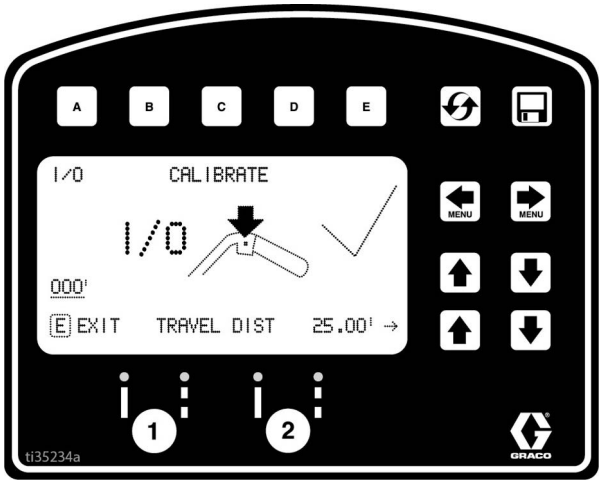

5. Turn on laser and align laser dot with 1 foot (30.5cm) on steel tape.

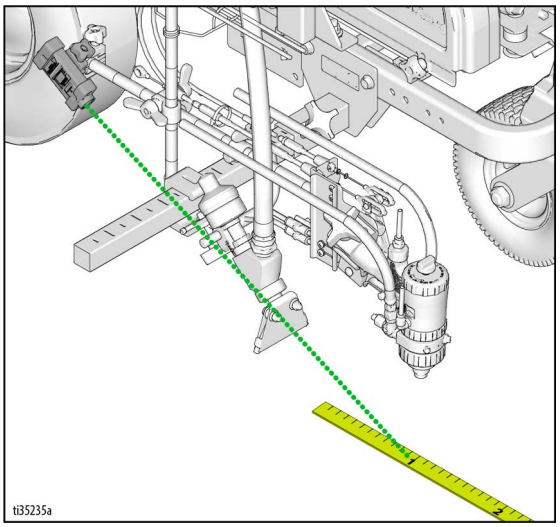

6. Press and release gun trigger control to start calibration.

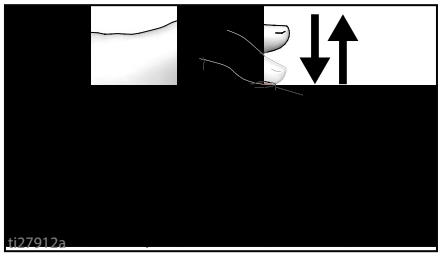

7. Move striper forward. Keep laser dot on steel tape.

8. Stop when laser aligns with 26-ft (8m) or distance entered on steel tape (25-ft / 7.6m distance).

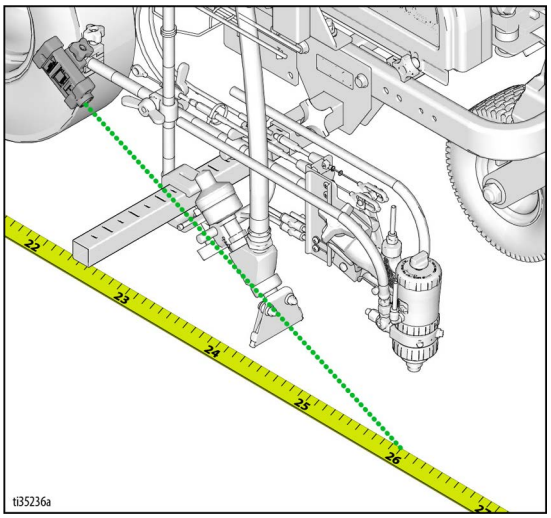

9. Press and release gun trigger control to complete calibration.

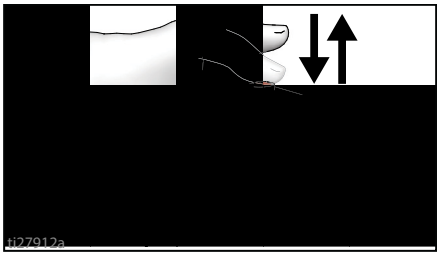

- Calibration is not complete when the exclamation symbol ⚠ is displayed.
- Calibration is finished when the check mark symbol ✓ is displayed.

10. Calibration is now complete.

Go to **Measure Mode (HP Auto Series)**, page 36, and verify accuracy by measuring the tape.

Striping Mode (HP Auto Series)

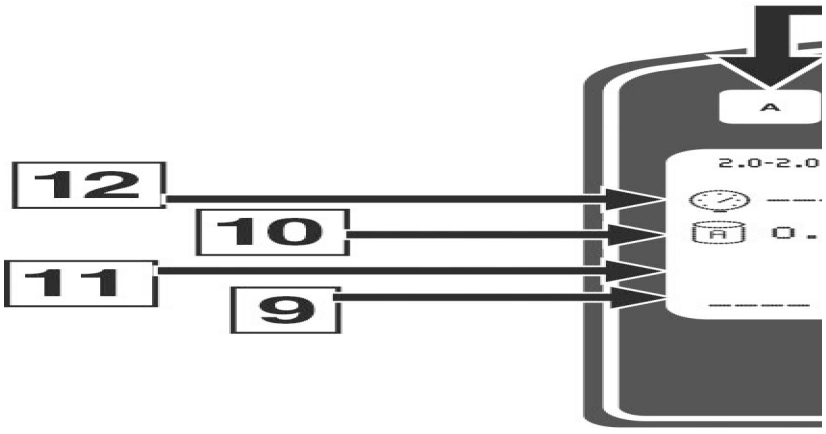

Ref.	Description
1	**Select** a “Favorite”, press for less than one second.
	Save a “Favorite”, press and hold for more than three seconds.
2	Cycles between viewing line width or paint and space value.
3	Cycles between Manual Mode, Semi-Automatic Mode, Automatic Mode.
	Manual Mode [M] **:** Press and hold gun trigger control to stripe.
	Semi-Automatic Mode [S] **:** Press and release gun trigger control to stripe the programmed length one time when in Skip Mode.
	Automatic Mode [A] **:** Press and release gun trigger control to start striping. Press and release button again to stop.
4	Resets trip distance.
5	Job Data Logger, page 45.
6	Scrolls between menu screens.
7	Paint and Space length **OR** line width adjustment buttons.
8	Auto guns activation buttons.
9	MIL thickness. While spraying “Instant MIL avg” is displayed. When stopped total “Job MIL avg” is displayed.
10	Total gallons (liters) sprayed, Pump A and B
11	Total line length sprayed.
12	Pressure, Pump A and B

Operating in Striping Mode

Striper must be running before activating gun trigger control.

1. Make sure engine is running.
2. Use gun activation buttons to select guns and line type.

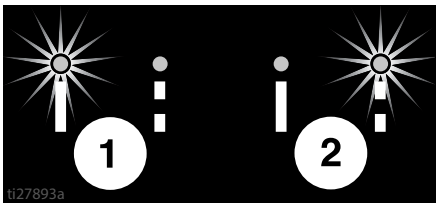

3. Press gun trigger control to begin spraying.

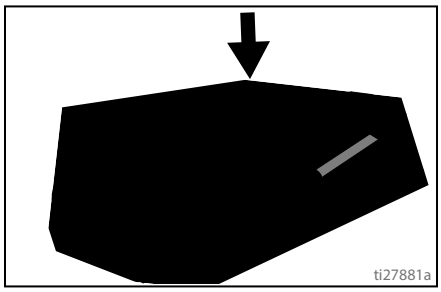

In Automatic Mode or Semi-Automatic Mode the [A] or [S] will flash when gun trigger control is pressed to signal mode is active.

Measure Mode (HP Auto Series)

Measure Mode replaces a tape measure to measure distances when laying out an area to be striped.

1. Use  to select Measure Mode.

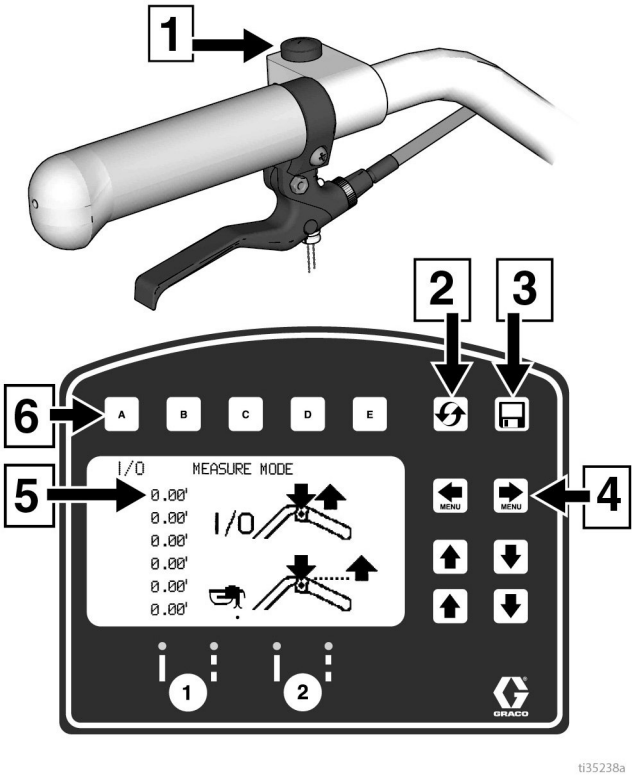

Ref.	Description
1	Press to start measurement, Press to stop measurement.
2	Hold to reset values to zero.
3	Job Data Logger, page 45.
4	Scroll between main menu screens
5	Last measurement taken
6	Press to start measurement, press to stop measurement

2. Press and release gun trigger control. Move striper forwards or backwards. (Moving backwards is a negative distance.)

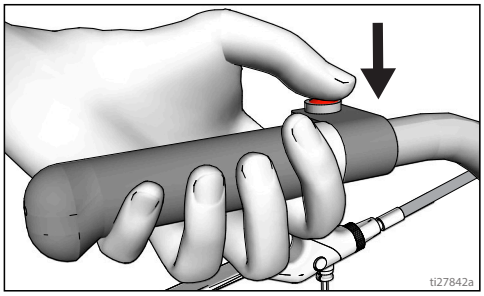

3. Press and release gun trigger control to end measured length. Up to six lengths are viewable.

The most recent measured length is also saved as the measured distance in the Stall Calculator Display. See **Stall Calculator**, page 38.

If an auto gun is activated, press and hold gun trigger control at any time to apply a dot. If trigger is held while striper is moving, a dot is marked every 12-inches (30.5cm).

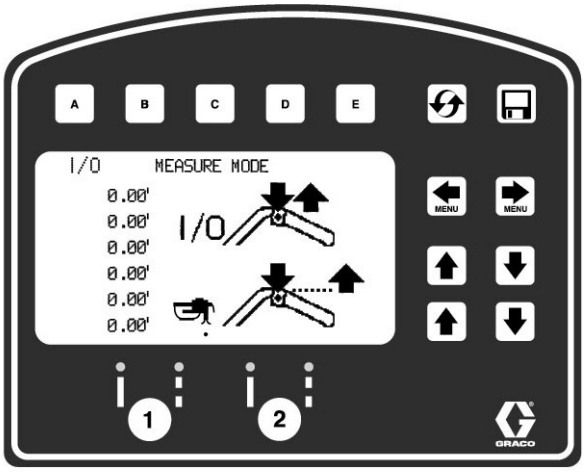

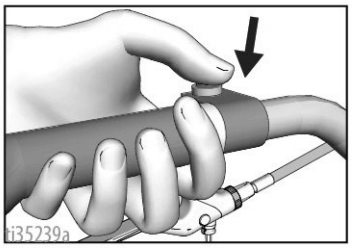

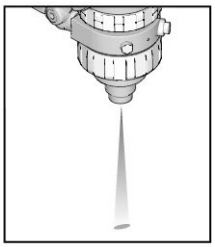

Layout Mode

Layout Mode is used to calculate and mark parking lot stalls.

1. Use  to select Layout Mode.

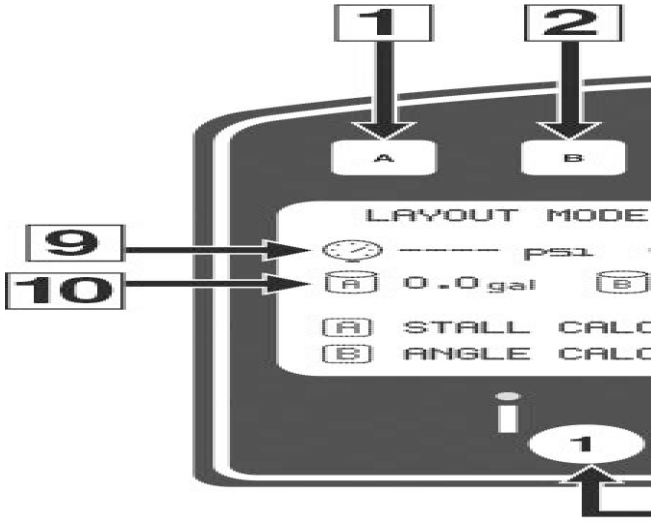

Ref.	Description
1	Opens Stall Calculator Menu. See **Stall Calculator**, page 38.
2	Opens Angle Calculator Menu. See **Angle Calculator**, page 39.
3	**Select** a “Favorite”, press for less than one second.
	Save a “Favorite”, press and hold for more than three seconds.
4	Job Data Logging, page 45.
5	Scroll between menu screens.
6	Adjust stall size/dot spacing.
7	Adjust dot size.
8	Auto Gun activation buttons.
9	Pressure, Pump A and B
10	Total gallons (liters) sprayed, Pump A and B

2. Use gun activation buttons to select guns.

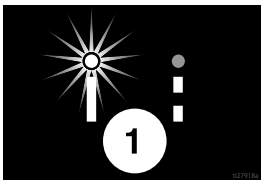

3. Press and release gun trigger control and move striper forward.

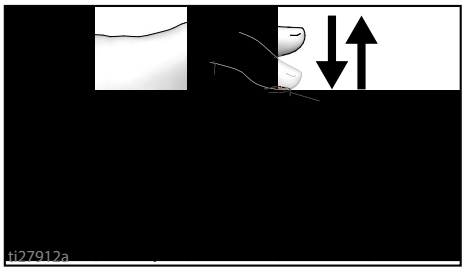

4. Striper default is to place a dot every 9.0 ft (2.7m) to mark the stall size. Stall size is adjustable.

5. Dots are laid down until gun trigger control is pressed and released again.

NOTE: An indicator on the screen alternately flash when gun trigger control is pressed to signal mode is active.

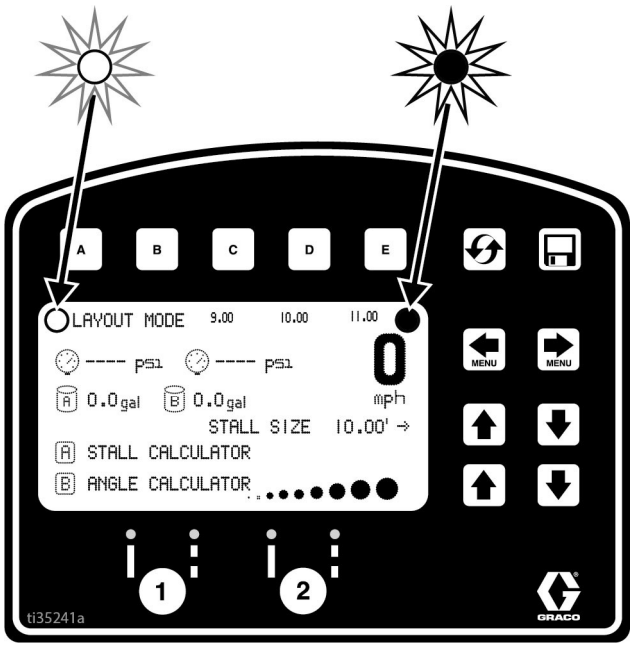

Stall Calculator

Stall Calculator is used to set the stall size. The striper divides the measured length by the stall size to determine the number of stalls that will fit in the length measured. User can adjust number of stalls to a round number and stall width is calculated.

1. Use [MENU] [MENU] to select Layout Mode. Press [A] to open Stall Calculator Menu.

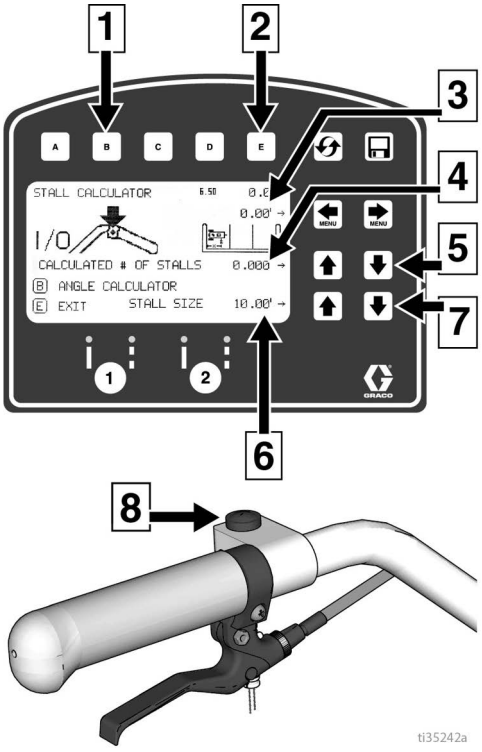

Ref.	Description
1	Opens Angle Calculator Menu. See **Angle Calculator**, page 39.
2	Exits and returns stall size to Layout Mode.
3	Measured distance.
4	Calculated # of stalls. Changing the number of stalls will change the stall size.
5	Adjusts number of stalls.
6	Stall size. Changing stall size changes the calculated # of stalls.
7	Adjusts stall size.
8	Press to start measurement, Press to stop measurement.
9	Adjust Offset (x)
10	Stores Offset (x). Hold for 2 seconds to store value.

2. The most recent length measured in Measure Mode is automatically displayed. Press gun trigger control to start a new measurement. Press again to stop measuring. When measuring between curbs, the distance from the back tire/curb to the gun/laser dot, can be accounted for by setting the Offset (x) value.
   a. Back the striper up to the curb, then use a tape measure to measure from where the tire touches the curb to the laser dot on the ground.
   b. Use [MENU] [MENU] to enter the offset (x) value.
   c. This value can be stored by holding [D] for 2 seconds.
   d. The value stored under [D] can be added to the measured distance before or after the measurement is taken between the curbs.
   e. The offset (x) value can also be adjusted before or after the measurement is taken by using [MENU] [MENU].

   Stall size and calculated number of stalls are both adjustable.
3. Press [E] to return to Layout Mode. The Stall size is saved and displayed on the Layout Mode screen.

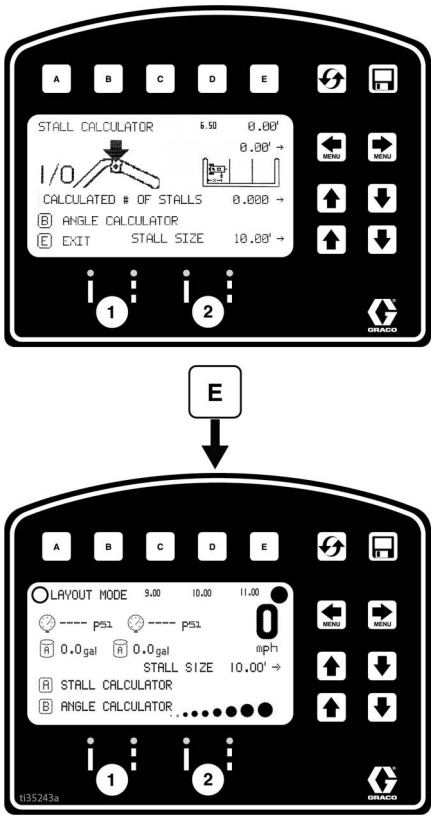

4. Press and release gun trigger control to start marking dots. Press and release gun trigger control again to stop.

Angle Calculator

Angle Calculator is used to determine the offset value and dot spacing value for a layout.

1. Use MENU MENU to select Layout Mode. Press B to open Angle Calculator Menu.

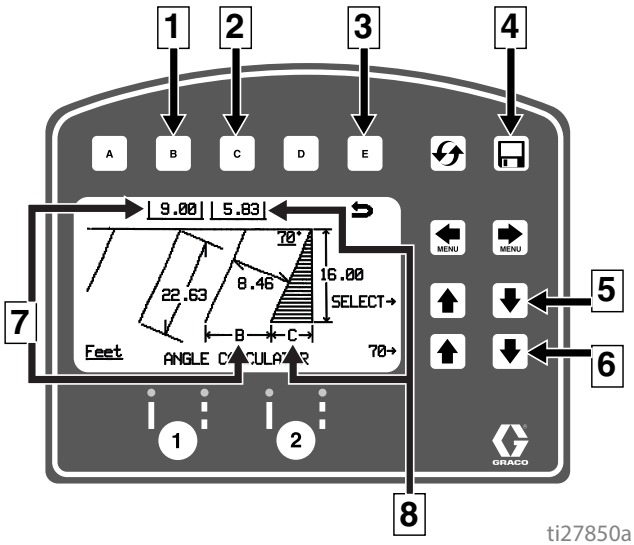

Ref.	Description
1	Transfers calculated dot spacing, B, to Layout Mode.
2	Transfers calculated offset, C, to Layout Mode.
3	Exits and returns to Layout Mode without transferring any values.
4	Data Logging.
5	Select input variables.
6	Adjust the variable selected.
7	Calculated dot spacing, B.
8	Calculated offset, C.

2. Dot spacing (B) and offset (C) are calculated based on the parameters entered:

   Stall angle
   Stall depth
   Stall size (width)
   Line Length

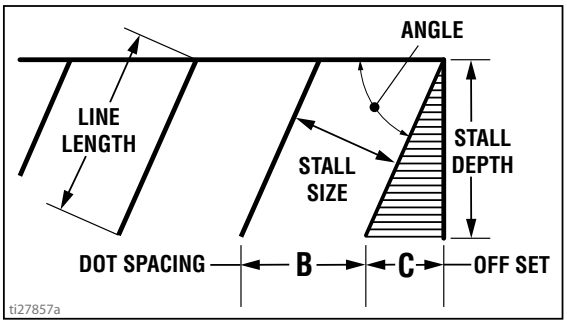

3. Press C to transfer calculated offset distance to Layout Mode. Save this value in favorites if desired.

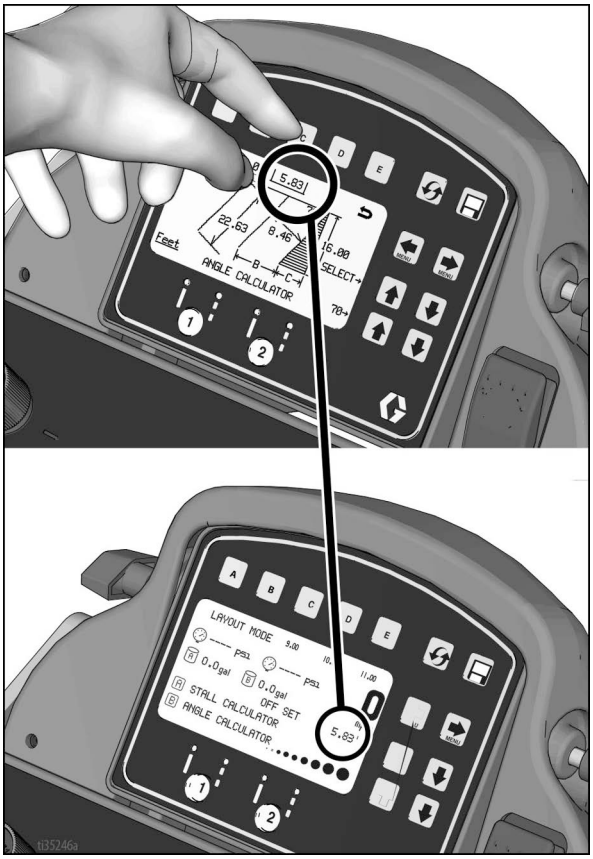

4. Press [B] to transfer calculated dot spacing distance to Layout Mode. Save this value in favorites if desired.

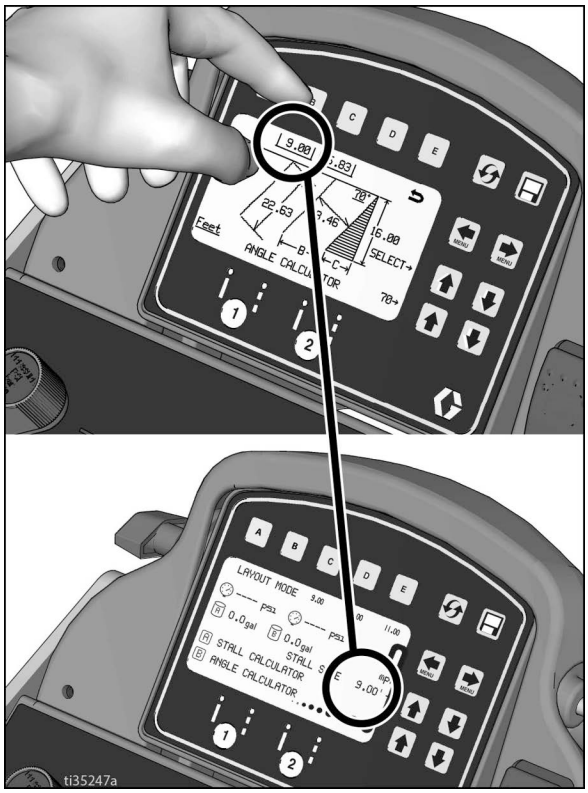

5. Press and release gun trigger control to start marking stall size dots. Press and release gun trigger control to stop marking.

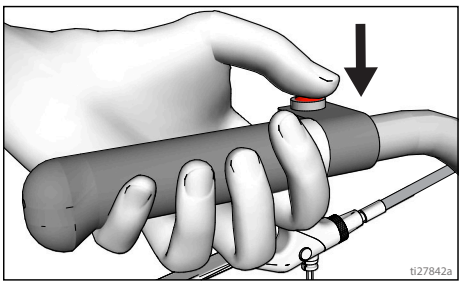

Setup/Information

Use MENU MENU to select Setup/Information.

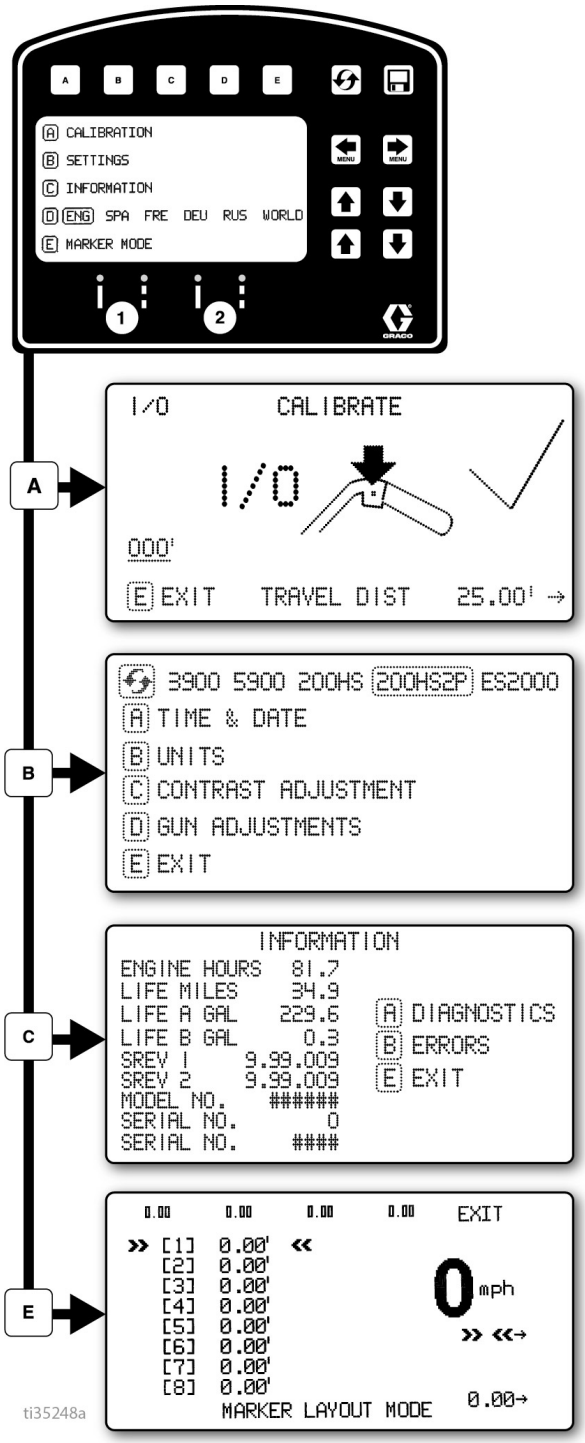

Press D to select Language.
See **Language**, page 33.

See **Calibration**, page 33.

See **Settings**, page 42.

See **Information**, page 43.

See **Marker Layout Mode**, page 44.

Settings

Use [MENU] [MENU] to select Setup/Information. Press [B] to open Settings Menu.

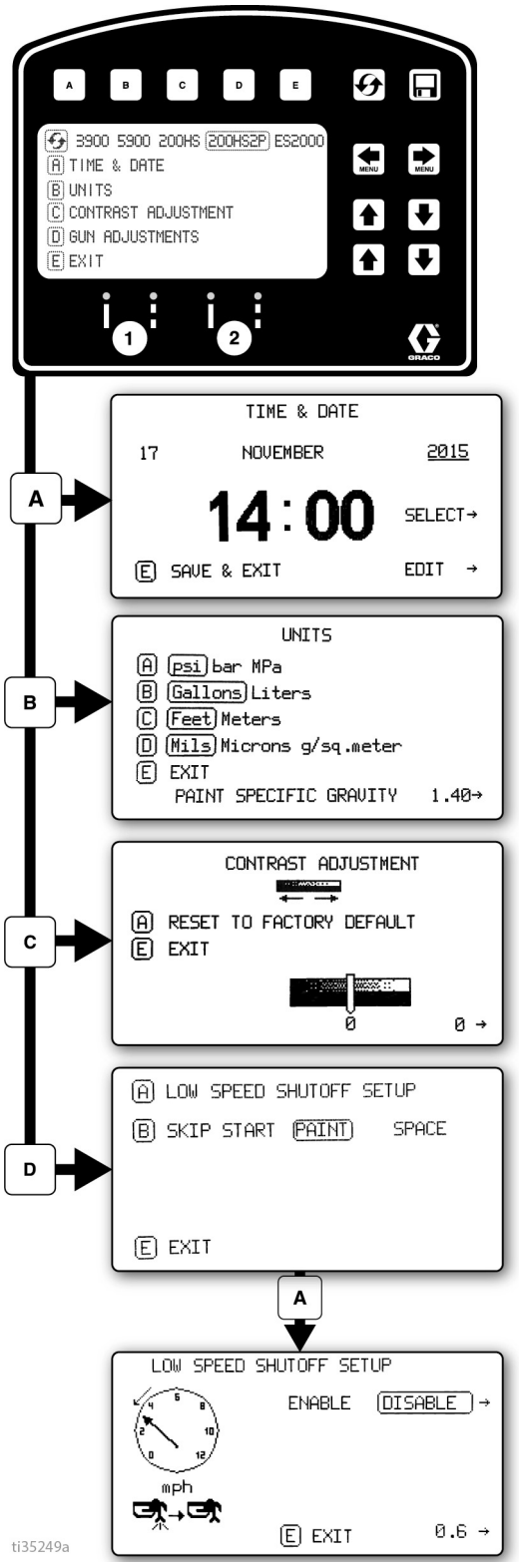

[Chooses the machine type.] Necessary for accurate gallon counting.

Use [▲▼▲▼] to set time and date. Needed for accurate Data Logging.

Set units with [A] [B] [C] [D]

Use [▲▼] to adjust screen contrast to the desired value.

For programmed skip lines, press [B] to choose:

Paint first ***or*** ***Skip first***

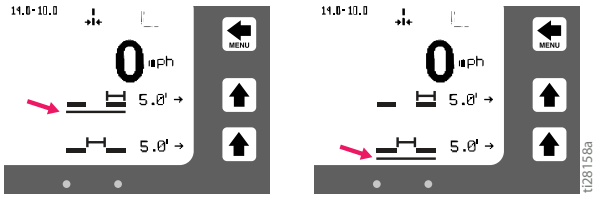

In Auto-mode, guns won't fire or will shut off if speed is below set value.

[MENU] [MENU] Enable or Disable Low Speed Shutoff

[▲▼] Adjust low speed setting.

Information

Use [MENU] [MENU] to select Setup/Information. Press [C] to open Information Menu.

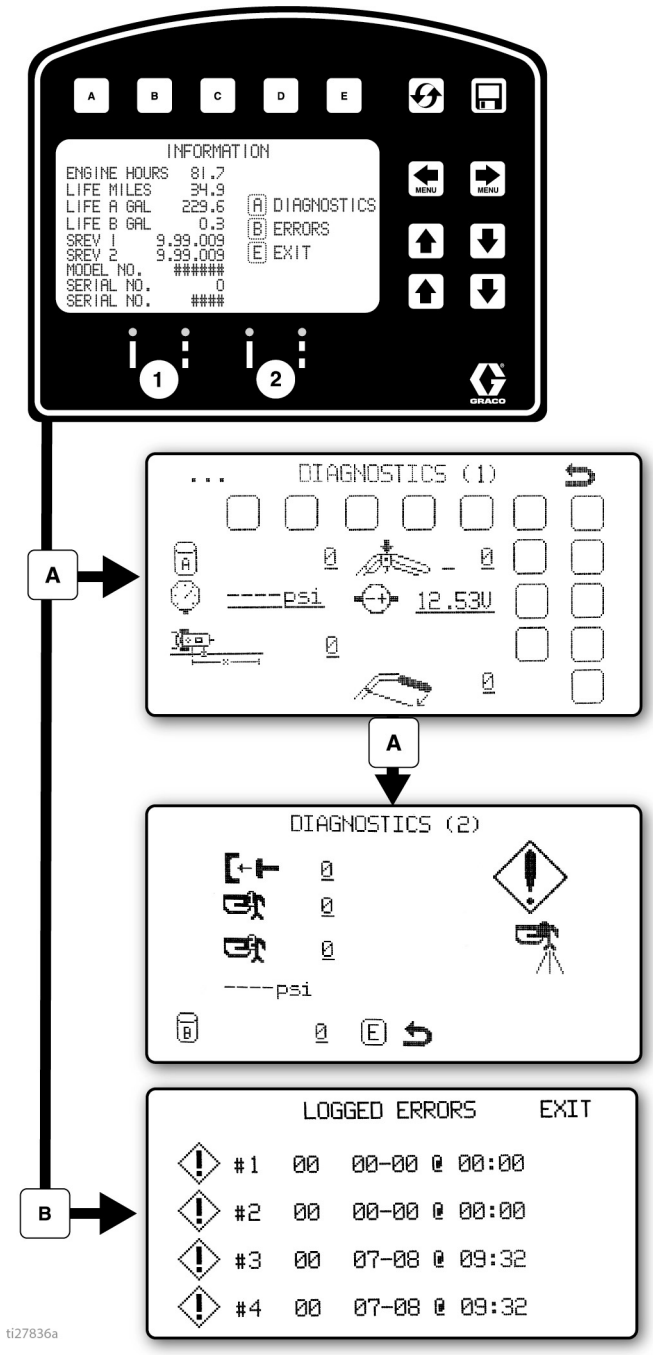

Displays and logs life, data, and striper information.

View and test functionality of component

- Stroke Counter
- Touch Pad Buttons
- Pressure Transducer
- Engine Voltage
- Distance Sensor
- Battery Voltage

- Clutch
- Solenoid 1
- Solenoid 2
- Battery charge state

Logs last four error codes that occurred.

Code Description
02 = Over pressure
03 = No transducer detected

- Reset error codes

Marker Layout Mode

The Marker Layout Mode feature sprays a dot or a series of dots to mark an area.

1. Use MENU MENU to select Setup/Information. Press E to open Marker Layout Mode.

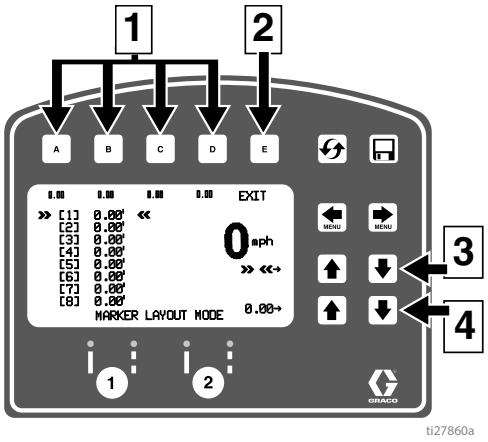

Ref.	Description
1	**Select** a “Favorite”, press for less than one second.
	Save a “Favorite”, press and hold for more than three seconds.
2	Exits and returns to Information Menu.
3	Select value to change.
4	Adjust spacing value.

2. Use arrow keys to set up a marker pattern.

3. Marker layout example shows a typical lane layout for reflective markers. Set space sizes up to eight consecutive measurements. By leaving zeros in any space, Marker Layout Mode will skip to the next measurement in a continuous loop.

   Some other uses of Marker Layout Mode are:

- Multiple spaced handicap stall layout
- Double line stalls

4. Set gun switch to skip line or solid line.

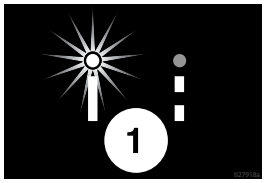

5. Press and release gun trigger control to start marking dots. Press and release gun trigger control again to stop.

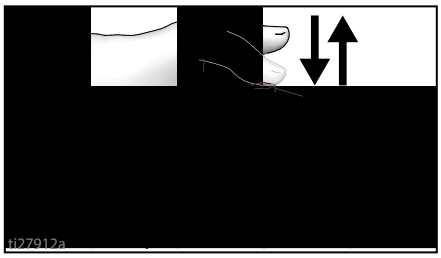

An indicator before and after Marker Mode on the screen alternately flash when gun trigger control is pressed to signal mode is active.

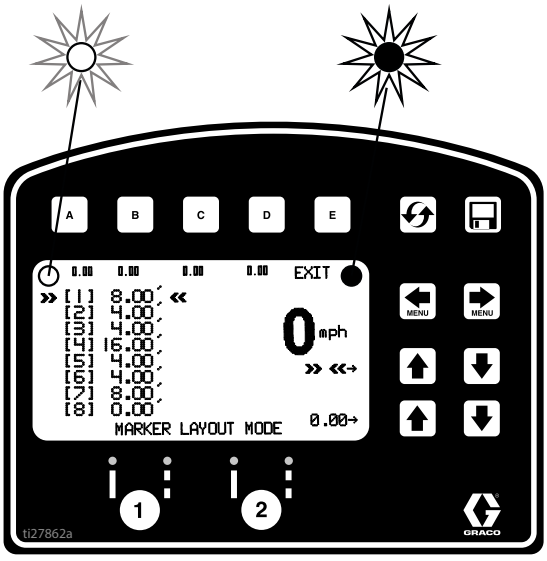

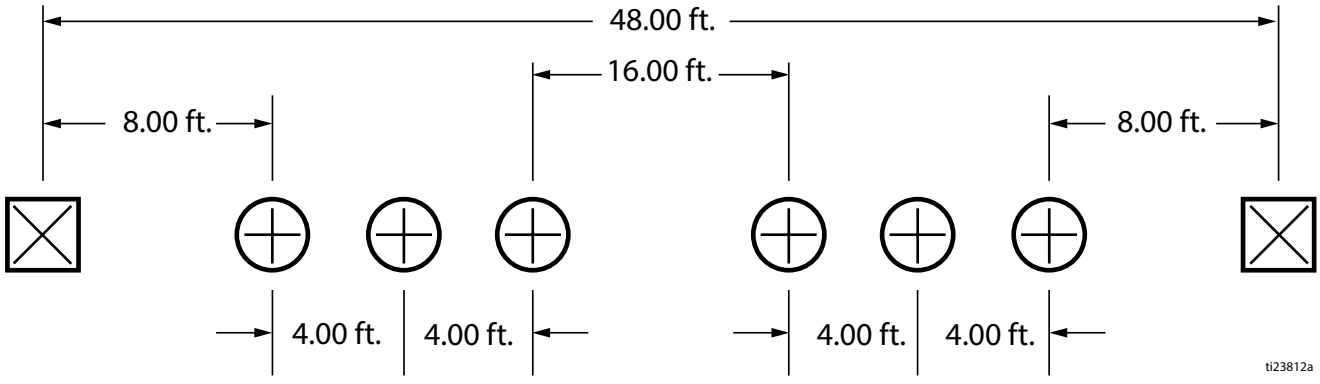

Data Logging

The LLV control is equipped with Data Logging, which allows the user to recall job data and export the data from the machine to a USB drive.

1. Press the to open the Data Logging pop up window.
2. Choose to start recording a new job or view jobs previously done.

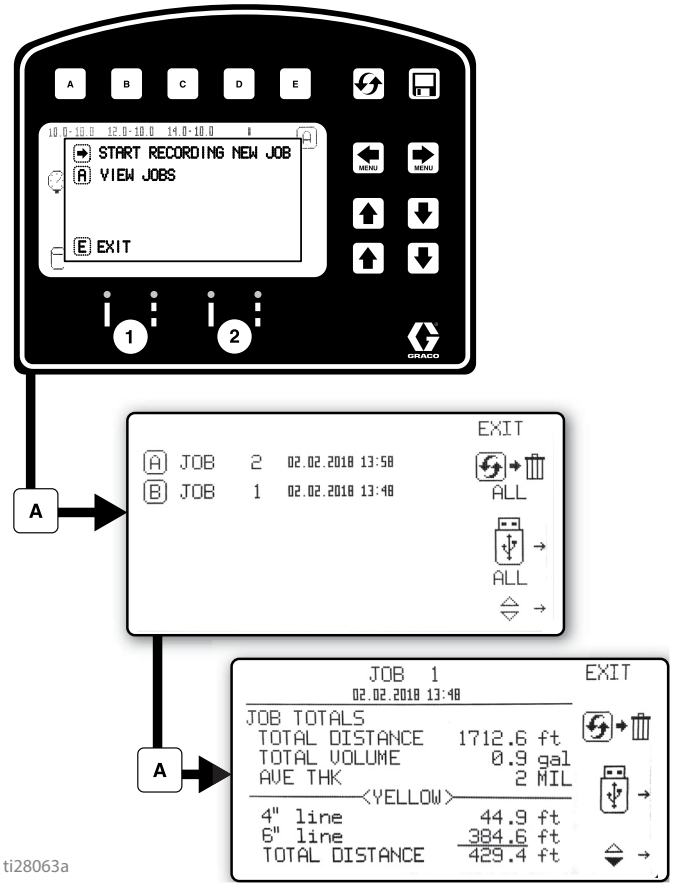

Start recording a new job.

Erase all jobs

Export all jobs to USB

Erase jobs

Export job to USB

Job data is compiled while spraying. A summary of volume sprayed, distance sprayed and average mil thickness is displayed for the entire job. The job is also broken down by colors, line widths and stencil volume sprayed.

Maintenance - Fusion MMA PC Gun

Supplied Tool Kit

- Hex Nut Driver; 5/16
- Screwdriver; 1/8 blade
- Nozzle Drill Bit; See **Table 1: Nozzle Drill Bit Sizes**, page 47.
- Impingement Port Drill Bit; various sizes depending on port size. See **Table 3: Impingement Port Drill Bit Sizes**, page 48.
- 117661 Pin Vise; dual reversible chucks

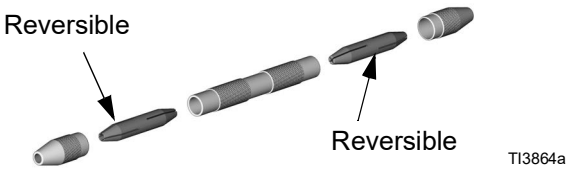

- 551189 Grease Gun; with 3 oz grease

Keep Gun Clean

Keep gun clean with accessory gun cover, page 90.

Applying a light coat of lubricant will make cleaning easier.

As Needed

1. **Clean Gun Surface**, page 52.
2. **Clean Spray Tip Adapter and Mix Chamber Nozzle**, page 46, a minimum of once a day.
3. **Inspect the Check Valves**, page 47.
4. **Clean Gun Fluid Manifold**, page 53.
5. **Clean Passages**, page 54.
6. **Clean Mix Chamber Impingement Ports**, page 48.

Weekly to Monthly

1. Clean **Clean Mix Chamber Impingement Ports**, page 48. Check o-rings.
2. Clean/**Inspect the Check Valves**, page 47. Check o-rings and filters.

Flush Gun

If it is necessary to flush gun, use following procedure.

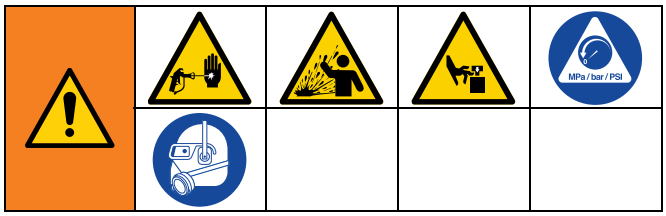

1. Follow **Grounding Instructions**, page 13.
2. Flush with acetone into a grounded metal pail, holding a metal part of fluid manifold firmly to side of pail. Use the lowest possible fluid pressure when flushing.
3. Perform **Pressure Relief Procedure**, page 14.

Clean Spray Tip Adapter and Mix Chamber Nozzle

1. Engage Piston Safety Lock.

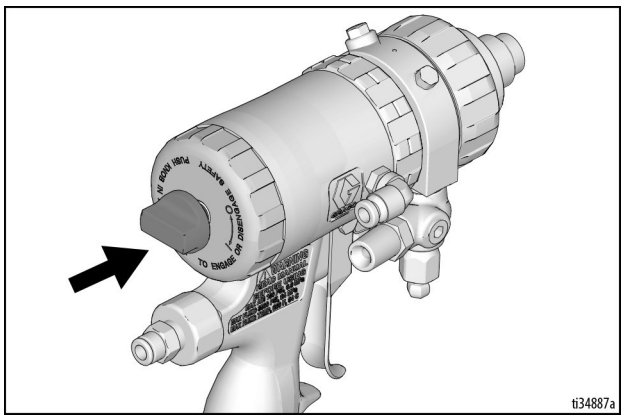

2. Refer to **Table 1: Nozzle Drill Bit Sizes**, page 47. Also see identification chart under **Drill Bit Kits**, page 68. Use the appropriate size drill bit to clean Mix Chamber (13). If necessary, clean Spray Tip Adapter (3) gently with stiff brush. If necessary, remove Spray Tip Adapter and clean Mix Chamber with drill bit.

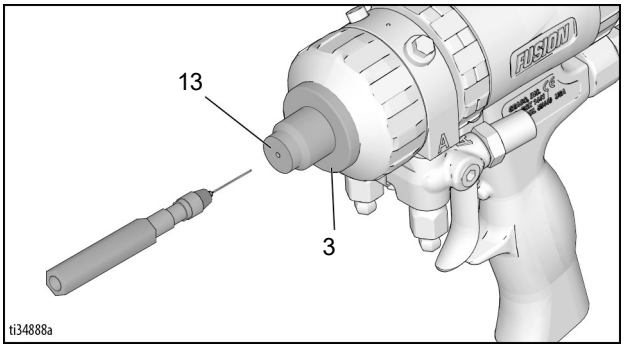

Table 1: Nozzle Drill Bit Sizes

Flat Spray	
Mix Chamber Part No.	**Drill Size in. (mm)**
PC29FL	3/32, .094 (2.35)

Inspect the Check Valves

1. Follow the **Pressure Relief Procedure**, page 14.
2. Follow **Flush Gun**, page 46, to remove residual chemical.
3. Remove the Gun Fluid Manifold (12), see **Clean Passages**, page 54. Leave air connected. **Clean Gun Fluid Manifold**, page 53.

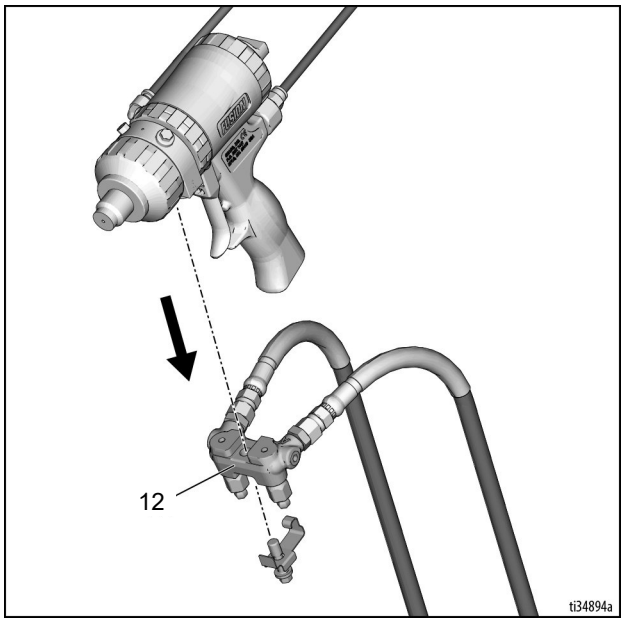

4. Shut off air.

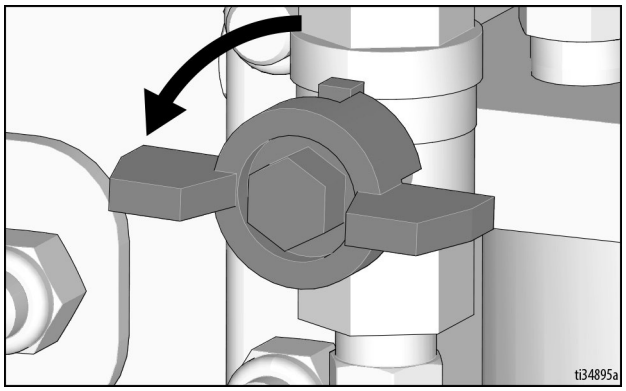

NOTICE

To prevent cross-contamination in the gun, do not interchange A component and B component parts. Cross-contamination can result in cured material in the gun. Cured material may damage the sealing surfaces, block fluid passages, and prevent gun function.

5. Pry out check valves (26) at notch.

Damaged check o-rings (26f, 26g) may result in external leakage. To avoid potential leakage and serious injury from skin injection, replace any damaged o-rings.

6. Slide filter (26d) off. Clean and inspect parts. Thoroughly inspect o-rings (26f, 26g). If necessary, remove screw (26b) and disassemble entire check valve.

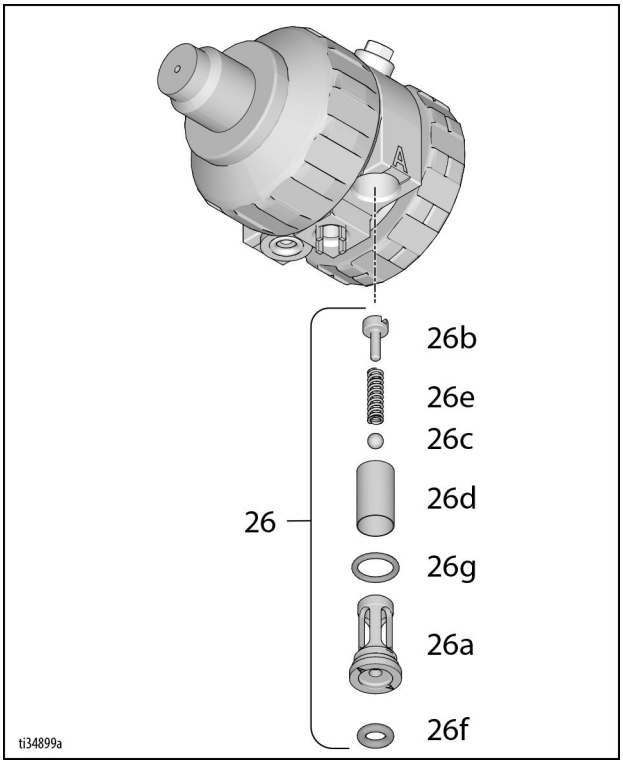

7. Reassemble check valves. Screw (26b) should be flush (within 1/16 in. or 1.5 mm) of housing (26a) surface. Liberally lubricate o-rings (26f, 26g) and carefully reinstall in fluid housing.
8. Attach the Gun Fluid Manifold, see **Clean Passages**, page 54. Connect air. Return gun to service.

Clean Mix Chamber Impingement Ports

1. Follow the **Pressure Relief Procedure**, page 14.
2. Follow **Flush Gun**, page 46, to remove residual chemical.
3. Follow **Remove the Fluid Cartridge**, page 49.
4. Drill impingement ports (IP).
5. Push mix chamber forward until impingement ports (IP) are visible. See **Table 3: Impingement Port Drill Bit Sizes**, page 48, for appropriate size drill to clean ports. Also see identification chart under **Drill Bit Kits**, page 68. Some mix chambers have counterbore holes (CB) and require two drill sizes to clean impingement ports completely.

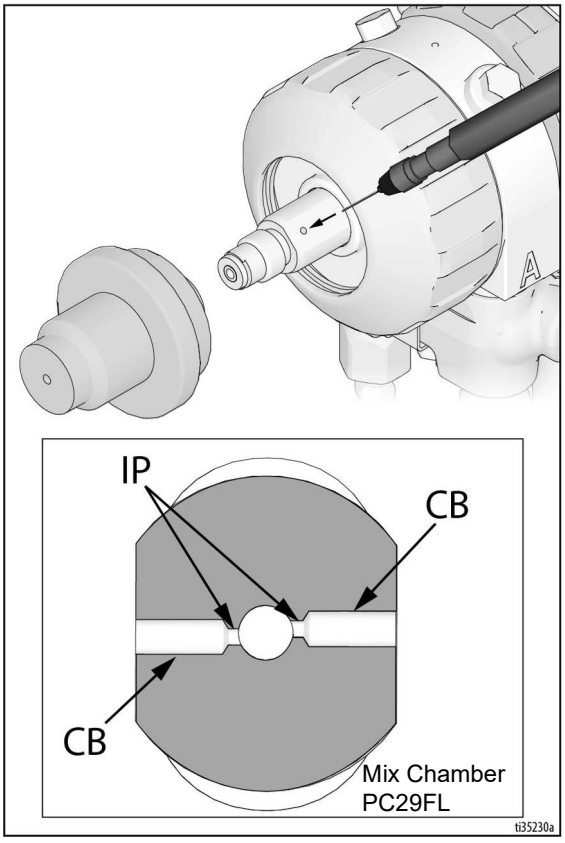

Table 3: Impingement Port Drill Bit Sizes

Mix Chamber Part No.	Impingement Port (IP) Drill Bit Size in. (mm)	Counterbore (CB) Drill Bit Size in. (mm)
PC29FL	#69, .029 (0.74)	#53, .060 (1.50)

NOTICE

To prevent cross-contamination in the gun, do not interchange A component and B component parts. Cross-contamination can result in cured material in the gun. Cured material may damage the sealing surfaces, block fluid passages, and prevent gun function.

6. Follow **Assemble the Spray Gun**, page 15. Return gun to service.

Remove the Fluid Cartridge

1. Follow the **Pressure Relief Procedure**, page 14.
2. Verify that fluid valves are closed.
3. Engage the Piston Safety Lock (11). See **Piston Safety Lock**, page 11.



4. Turn off the air valve.
5. Remove the Spray Tip Adapter (3).
6. Remove the Front Retaining Ring (18).

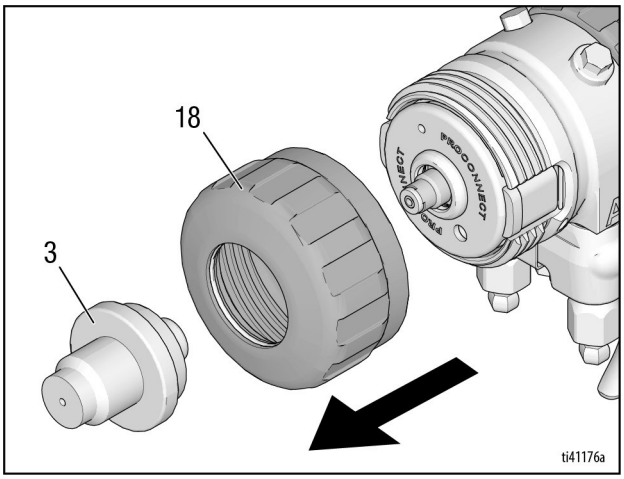

7. Remove the PC Fluid Cartridge (20) by pulling forward or inserting a screwdriver into the pry slots. Sealing surfaces and opposing checks will cause resistance.

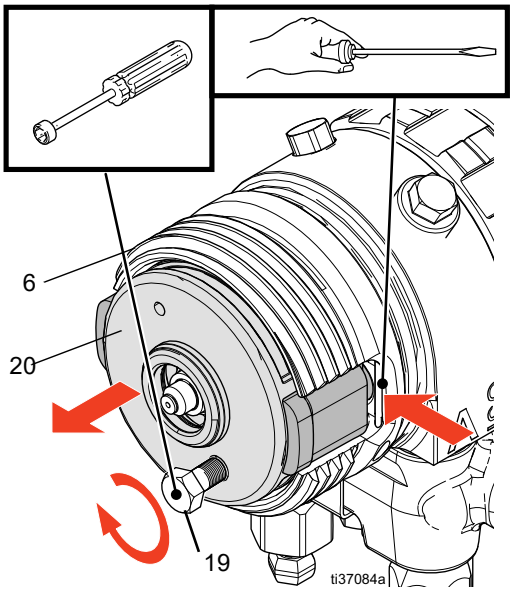

NOTE: If excessive force is required to remove the PC Fluid Cartridge (20), use the provided nut driver and Jack Screw (19) to lift the cartridge out of the Fluid Housing (6).

8. Clean the face of the Fluid Housing (6) with compatible solvent.

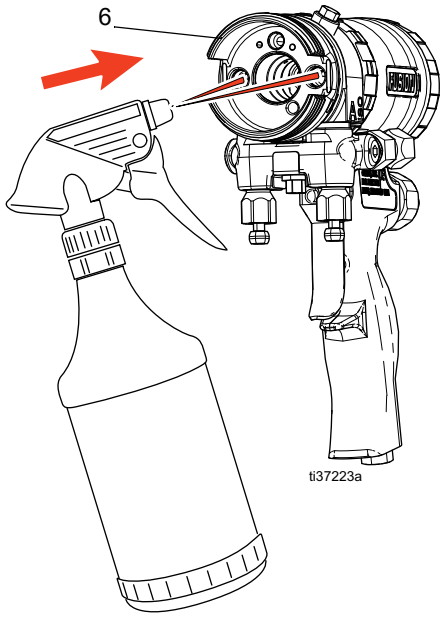

NOTICE

To prevent cured material in fluid bores, clean the A and B side ports on the Fluid Housing (6) prior to inserting a new cartridge. Exposure to air can result in cured material in the gun. Cured material may cause gun components to stick together resulting in removal difficulty and damage to sealing surfaces.

9. Remove the Mix Chamber (13) and inspect sealing surfaces. Verify that the impingement ports are clean and that there are no scratches on the surface. See **Maintenance - Fusion MMA PC Gun**, page 46.

10. Proceed to **Store the Fluid Cartridge**, page 52.

Reinstall or Replace the PC Fluid Cartridge

Identify the issue with your PC Fluid Cartridge and determine next steps.

- **If the gun does not spray chemical when triggered:** Follow **Inspect the Fluid Cartridge**, page 50.
- **If the gun sprays only one chemical when triggered:** Follow **Inspect the Fluid Cartridge**, page 50.
- **If the gun spits chemical when detriggered:** Replace the fluid cartridge. Follow **Assemble the Spray Gun**, page 15.

Inspect the Fluid Cartridge

If the gun does not spray chemical, or only sprays one chemical when triggered, inspect the PC Fluid Cartridge for reacted chemical on the side sealing surfaces.

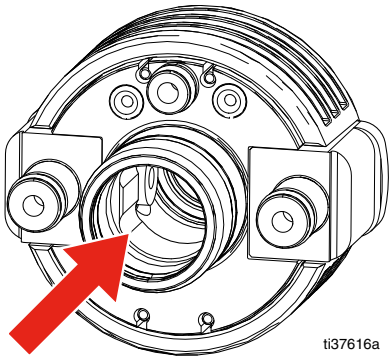

- **If reacted chemical is found near the side seals**: Replace the fluid cartridge. Follow **Assemble the Spray Gun**, page 15.
- **If no reacted chemical is found near the side seals**: Follow **Test Fluid Cartridge Restriction**, page 50.

Test Fluid Cartridge Restriction

If no reacted chemicals are found on the fluid cartridge, test the fluid cartridge restriction with the Grease Tool (21).

1. Insert Divider Tool (22) from the back of the PC Fluid Cartridge (20) so that it sits upright. The Divider Tool (22) prevents chemical from reaching the opposite side seal.

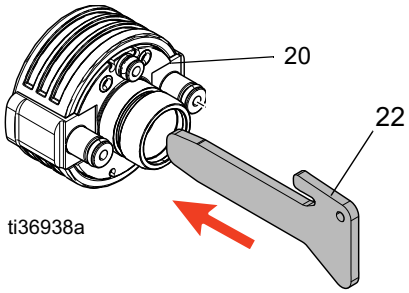

NOTICE

To prevent cross-contamination in the gun, do not interchange A component and B component parts. Cross-contamination can result in cured material in the gun. Cured material may damage the sealing surfaces, block fluid passages, and prevent gun function.

2. Guide the Grease Tool (21) over the B side fluid port and pump grease.

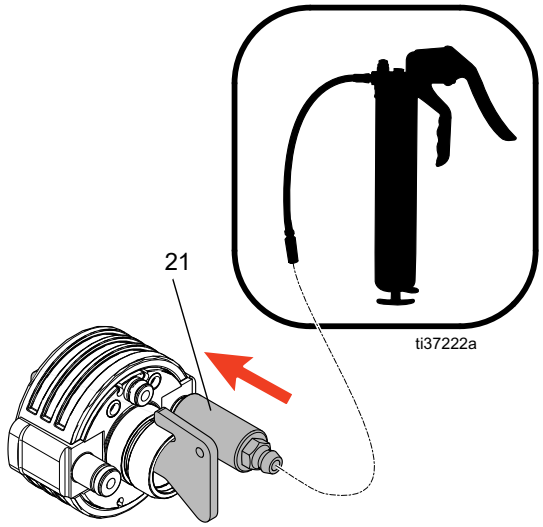

- **If grease purges out of the internal side seal:** No obstruction or restriction is in the flow path and the cartridge should be reused.
- **If the grease tool is forced backward off of the fluid port:** The flow path is restricted and the cartridge should be replaced.

3. Remove and clean the Grease Tool (21) to prevent contamination and repeat previous step for the A side.
4. Remove the Grease Tool (21) and Divider Tool (22). Clean and store for the next use.
5. Follow **Assemble the Spray Gun**, page 15, to replace or reinstall the fluid cartridge and prepare the gun to spray.

Store the Fluid Cartridge

If a usable PC Fluid Cartridge (20) has been exposed to chemical and removed from the gun, store the cartridge in a moisture-free environment.

1. Rinse off any residual chemical with a compatible solvent.
2. Submerge the cartridge in an acceptable storage liquid. See **Acceptable Cartridge Storage Liquids**, page 91.

NOTICE

To prevent cured material on sealing surfaces and passages, store cartridges in a moisture-free environment. Exposure to air can result in cured material. Cured material can obstruct passages and damage seals.

NOTICE

Air o-rings on cartridge are not chemically resistant. Soaking cartridge in solvent will cause o-rings to swell.

Clean Gun Surface

Wipe off outside of gun with compatible solvent.

Clean Spray Tip Adapter

Soak Spray Tip Adapter in compatible solvent. Clean holes with #58 (0.042) drill bit.

Lubrication

Liberally lubricate all o-rings, seals, and threads. Lubricate threads and outside of lock ring (11). See **Lubricant for Gun Rebuild**, page 90, to order lubricant.

Inspect the Piston Safety Lock

1. Perform **Pressure Relief Procedure**, page 14.
2. Disconnect air lines (D) from Air Line Quick Coupler (4) and remove Gun Fluid Manifold (12).

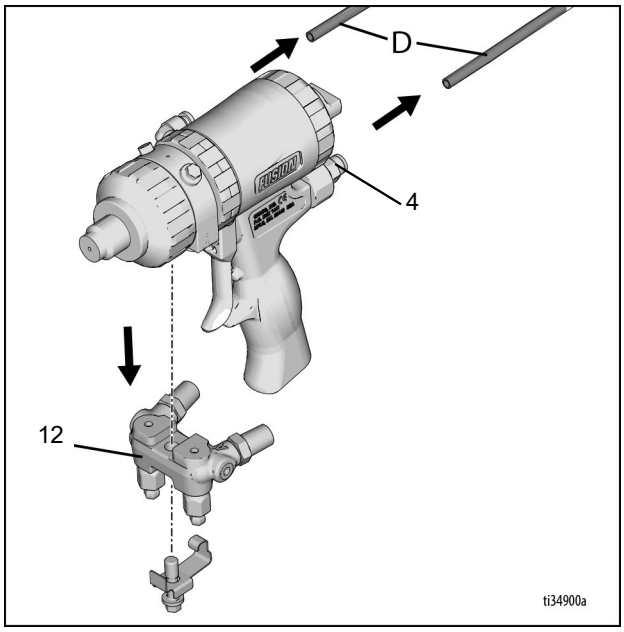

3. Unscrew cylinder cap (5). Hold piston stop (28) with wrench and unscrew from safety lock (4). Inspect spring (30) and o-rings (14, 24). Reference **Parts Drawing - Gun**, page 74.

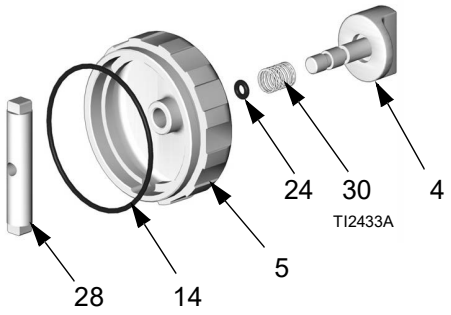

4. Liberally lubricate o-rings and reassemble. Clean threads with solvent or alcohol. Apply medium-strength sealant to threads on stop (28) and reassemble.
5. Attach fluid manifold. Connect air. Return gun to service.

Remove/Reinstall Gun Fluid Manifold

1. Close Fluid Valves A and B.

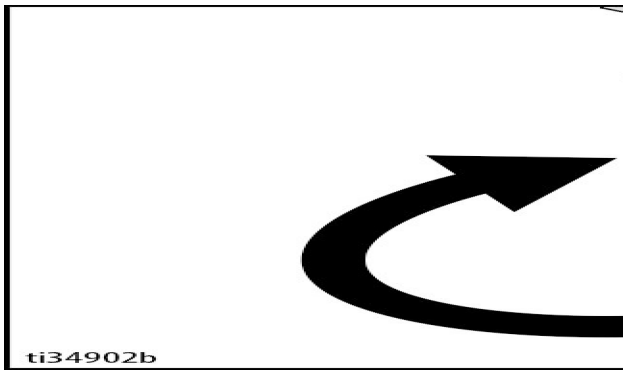

2. Loosen retaining bolt and remove Gun Fluid Manifold (12).

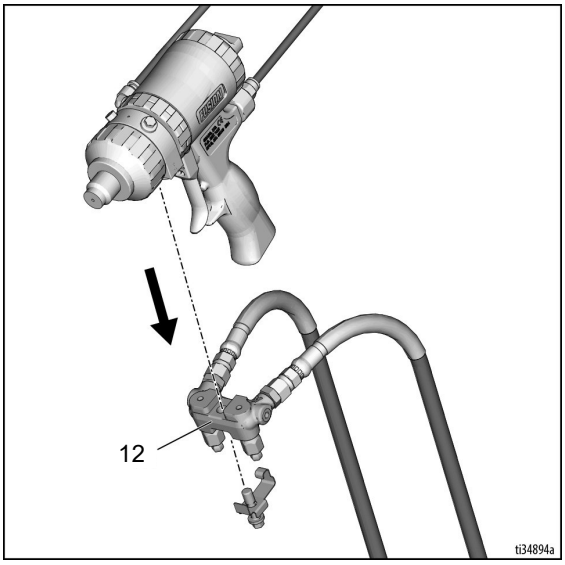

3. To reconnect Gun Fluid Manifold (12), tighten center bolt onto Fluid Housing of Fusion Gun.

Clean Gun Fluid Manifold

Clean Gun Fluid Manifold sealing faces with acetone and a brush whenever removed from gun. Be sure to clean the two fluid ports (X) in the top mating surface. Do not damage the flat sealing surfaces. Coat with grease if left exposed, to seal out moisture.

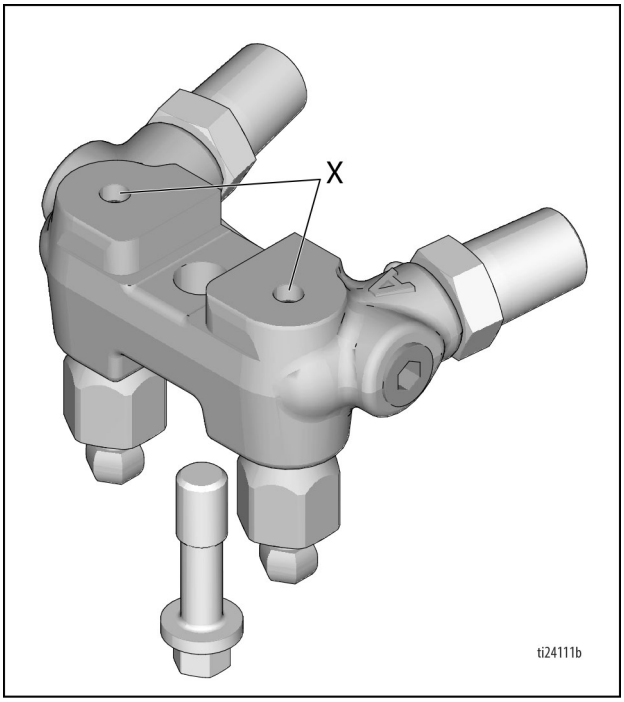

Clean Passages

1. Perform **Pressure Relief Procedure**, page 14.
2. If necessary, clean out passages in fluid housing and handle with drill bits. Refer to **TABLE 1 and to FIG. 1** for diameter and location of passages.

Table 1: Passage Diameters		
Passage Description	**Ref. Letter**	**Diameter in. (mm)**
Optional Air Inlet	ZB	7/16, 1/8 (11.0, 3.1)
Purge Air	ZC	1/8 (3.1)
Piston Air	ZD, ZE	1/8 (3.1)
Air Exhaust	ZF	11/32, 1/8 (8.7, 3.1)
Air Valve Bore	ZG	9/32 (7.1)
Cleanoff Air	ZH	3/32 (2.35)
Grease	ZJ	3/32 (2.35)
Fluid Housing Purge Air	ZK	5/32 (3.97)

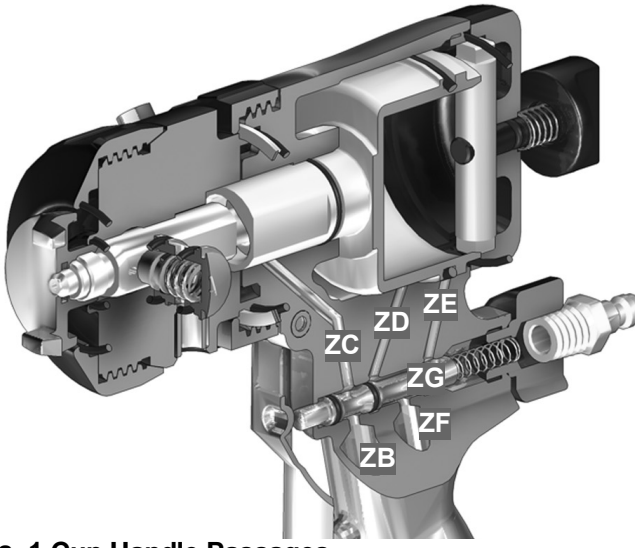

FIG. 1 Gun Handle Passages

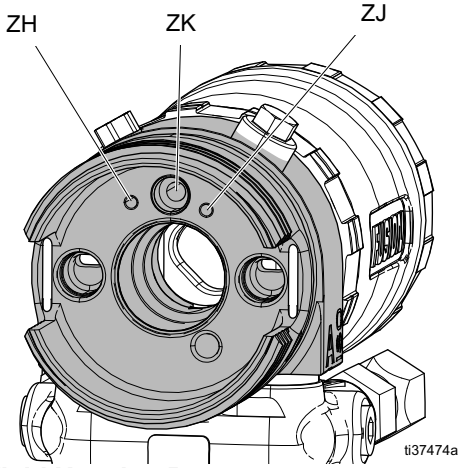

FIG. 2 Fluid Housing Passages

Clean Muffler

Remove and clean Muffler with acetone.

Inspect the Piston

1. Perform **Pressure Relief Procedure**, page 14.
2. Disconnect air lines (D) from Air Line Quick Coupler (4) and remove Gun Fluid Manifold (12).

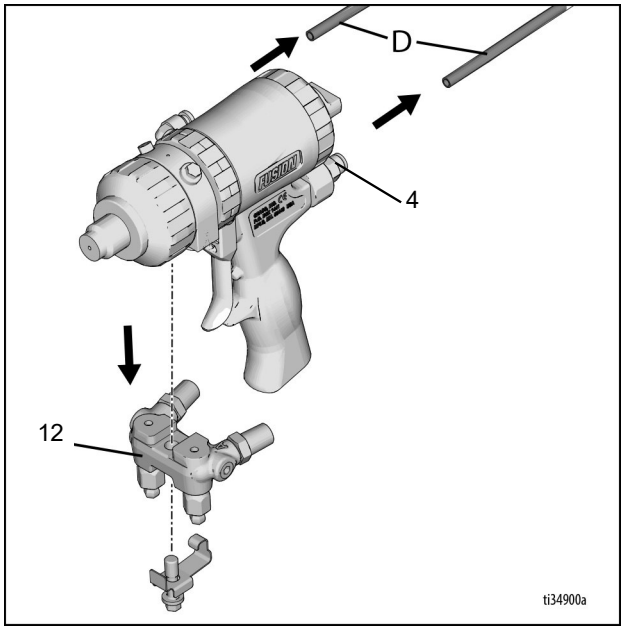

3. **Disassemble Front End of Fusion MMA PC Gun**, page 56.
4. Unscrew cylinder cap (5) and inspect o-ring (14). Reference **Parts Drawing - Gun**, page 74.

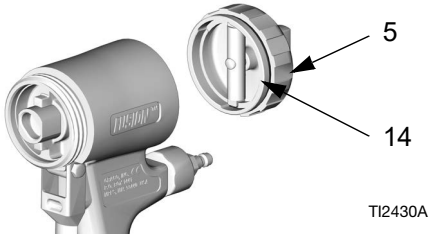

5. Push piston shaft to remove piston (15). Inspect piston o-ring (16) and shaft o-ring (17). Reference **Parts Drawing - Gun**, page 74.

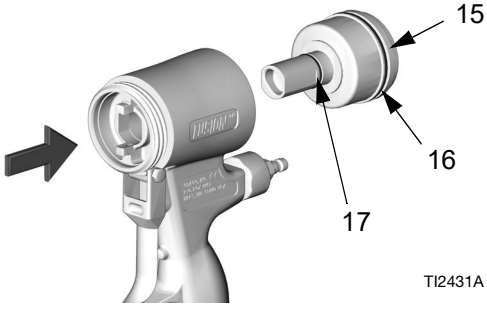

6. Liberally lubricate piston o-rings. Reinstall piston. Shaft is keyed for proper assembly. Push firmly to seat piston.

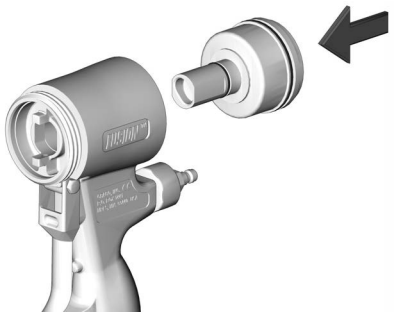

7. Install cylinder cap (5). Reference **Parts Drawing - Gun**, page 74.

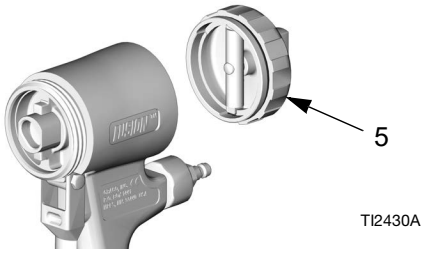

8. **Reassemble Front End of Fusion MMA PC Gun**, page 56.

9. Attach fluid manifold. Connect air. Return gun to service.

Inspect the Air Valve

1. Follow the **Pressure Relief Procedure**, page 14.

2. Disconnect air lines (D) from Air Line Quick Coupler (4) and remove Gun Fluid Manifold (12).

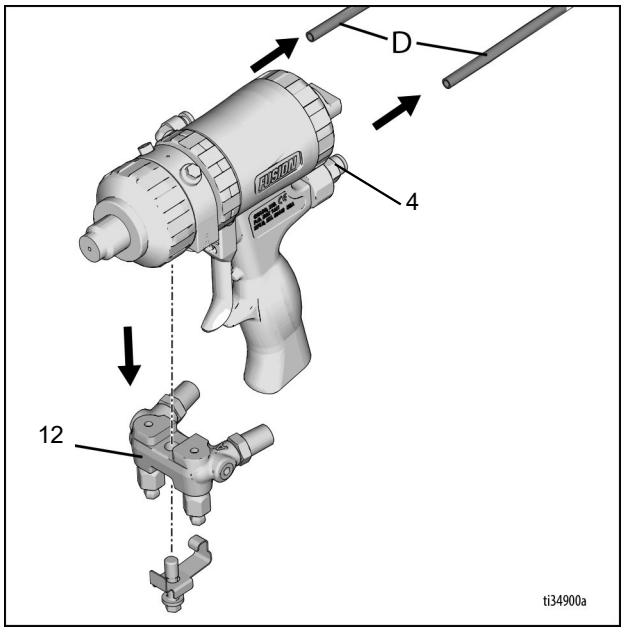

3. Unscrew air valve plug (2) and remove spring (31). Using a small diameter tool, push spool (32) out from front. Inspect o-rings (24). Reference **Parts Drawing - Gun**, page 74.

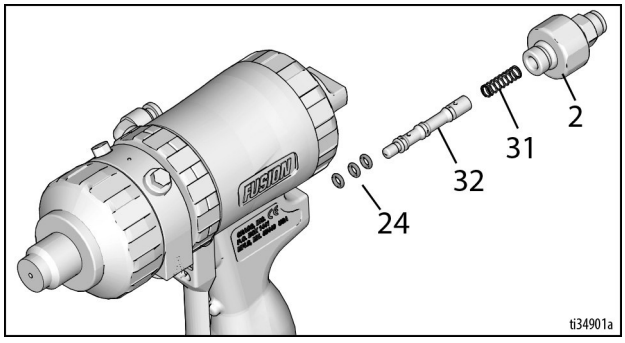

4. Liberally lubricate o-rings and reassemble. Torque plug (2) to 125-135 in-lb (14-15 N•m).

5. Attach the fluid manifold. Connect air. Return gun to service.

Disassemble Front End of Fusion MMA PC Gun

1. Follow the **Pressure Relief Procedure**, page 14.
2. Follow **Flush Gun**, page 46.

NOTICE

If Lock Ring (15) is stuck due to material buildup, do not force it by turning entire front end. Locating tabs may break off. Soak front of gun in solvent to soften cured material and free lock ring.

3. Unscrew Lock Ring (15) until front end of gun is loose. Turn Fluid Housing (6) 1/8 turn counterclockwise. Unscrew lock ring completely and remove front end of gun.

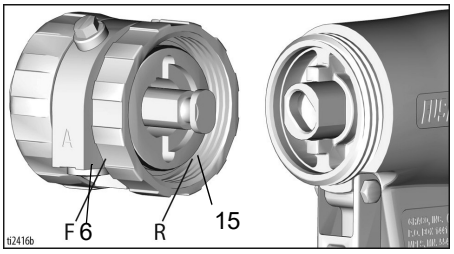

TI2416A

Reassemble Front End of Fusion MMA PC Gun

Improper attachment of the front end may result in serious injury from skin injection. To avoid injury, check that the front end is securely attached and the lock ring is snug against the handle before gun operation.

1. Engage the Piston Safety Lock (11). See **Piston Safety Lock**, page 11.

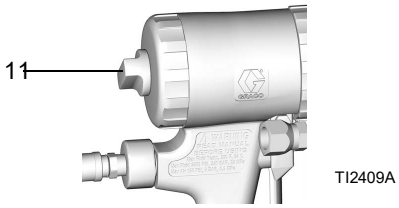

TI2409A

2. Push on Spray Tip Adapter (3) until it is flush with front of gun. This ensures that mix chamber is all the way back.

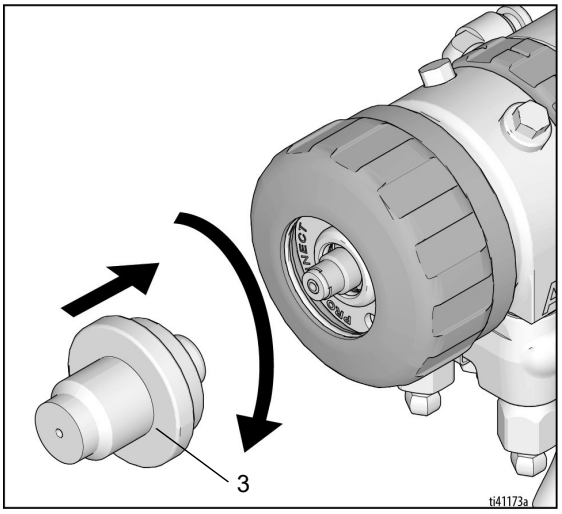

3. Check that o-ring (21) is in position (Reference **Parts Drawing - Gun**, page 74). Liberally lubricate o-ring, threads of Lock Ring (15) and handle (H), and outside of lock ring. Orient Fluid Housing (6) as required for desired fluid manifold mounting (bottom mounting is shown).
4. Insert keyed end of Mix Chamber (13) in socket (X). Screw lock ring onto handle as far as possible by hand.

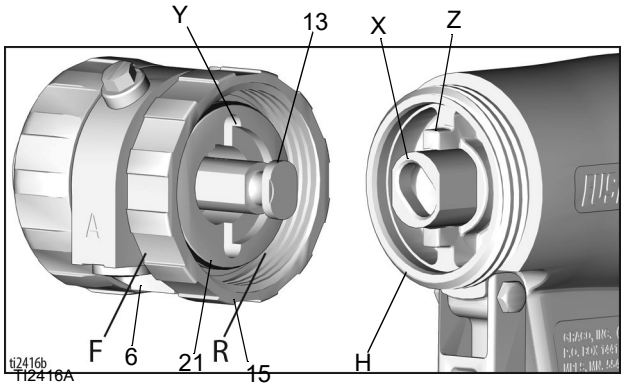

5. Turn Fluid Housing (6)1/8 turn clockwise to engage slots (Y) and tabs (Z). Push on front end to ensure it is properly seated. Continue screwing Lock Ring (15) onto handle (H) very securely. When properly assembled, lock ring is snug against handle.

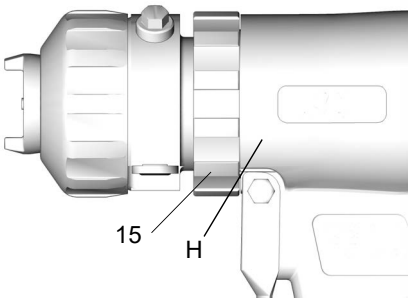

TI2423A

Maintenance - LineLazer V 200MMA 1:1

Periodic Maintenance

DAILY: After every use, thoroughly clean gun and components with acetone.

DAILY: Check air lines for clear passage ways. Ensure paint is not backed into air hose/fittings.

DAILY: Check engine oil level and fill as necessary.

DAILY: Check hydraulic oil level and fill as necessary.

DAILY: Check hose for wear and damage.

DAILY: Check gun safety for proper operation.

DAILY: Check prime/spray drain valve for proper operation.

DAILY: Check and fill gas tank

DAILY: Check that displacement pump is tight.

DAILY: Top off TSL level in displacement pump packing nut to help prevent material buildup on piston rod and early wear of packing.

AFTER THE FIRST 20 HOURS OF OPERATION: Drain engine oil and refill with clean oil. Reference Honda Engines Owner's Manual for correct oil viscosity.

WEEKLY: Remove engine air filter cover and clean element. Replace if necessary. If operating in an unusually dusty environment, check filter daily.

WEEKLY/DAILY: Remove any debris from hydraulic rod.

AFTER EACH 100 HOURS OF OPERATION: Change engine oil. Reference Honda Engines Owner's Manual for correct oil viscosity.

SEMI-ANNUALLY: Check belt wear, replace if necessary.

YEARLY OR 2000 HOURS: Replace belt.

AFTER EACH 500 HOURS OR 3 MONTHS OF OPERATION: Replace hydraulic oil and filter. Use Graco hydraulic oil 169236 (5 gallon/20 liter) or 207428 (1 gallon/3.8 liter) and filter 246173. Oil change interval dependent on environmental conditions.

SPARK PLUG: Use only BPR6ES (NGK) or W20EPR--U (NIPPONDENSO) plug. Gap plug to 0.028 to 0.031 in (0.7 to 0.8 mm). Use spark plug wrench when installing and removing plug.

Caster Wheel

1. Once each year, tighten nut under dust cap until spring washer bottoms out, then back off the nut 1/2 to 3/4 turn.
2. Once each month, grease the wheel bearing.
3. Check pin for wear. If pin is worn out, there will be play in the caster wheel. Reverse or replace the pin as needed.
4. Check caster wheel alignment as necessary. To

Recycling and Disposal

Rechargeable Battery Disposal

Do not place batteries in the trash. Recycle batteries according to local regulations. In the USA and Canada, call 1-800-822-8837 to find recycling locations or go to www.call2recycle.org.

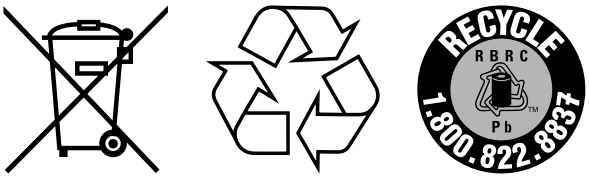

End of Product Life

At the end of the product's useful life, dismantle and recycle it in a responsible manner.

- Perform the **Pressure Relief Procedure**, page 14.
- Drain and dispose of fluids according to applicable regulations. Refer to the material manufacturer's Safety Data Sheet.
- Remove motors, batteries, circuit boards, LCDs (liquid crystal displays), and other electronic components. Recycle according to applicable regulations.
- Do not dispose of batteries or electronic components with household or commercial waste.

  
- Deliver remaining product to a recycling facility.

Hydraulic Oil/Filter Change

Removal

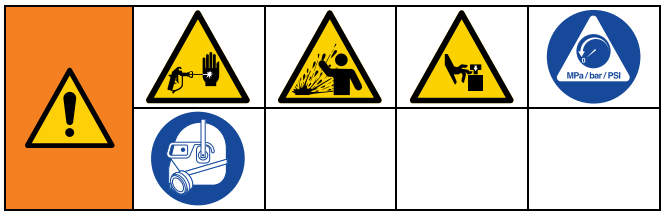

1. Perform **Pressure Relief Procedure**, page 14.
2. Place drip pan or rags under sprayer to catch hydraulic oil that drains out.
3. Remove drain plug. Allow hydraulic oil to drain.
4. Unscrew oil filter (418) slowly. Oil runs into groove and drains out rear.

Installation

1. Apply a light film of oil on oil filter gasket. Install drain plug and oil filter. Tighten oil filter 3/4 turn after gasket contacts base.
2. Fill tank with Graco synthetic hydraulic oil, ISO 46.
3. Check oil level.

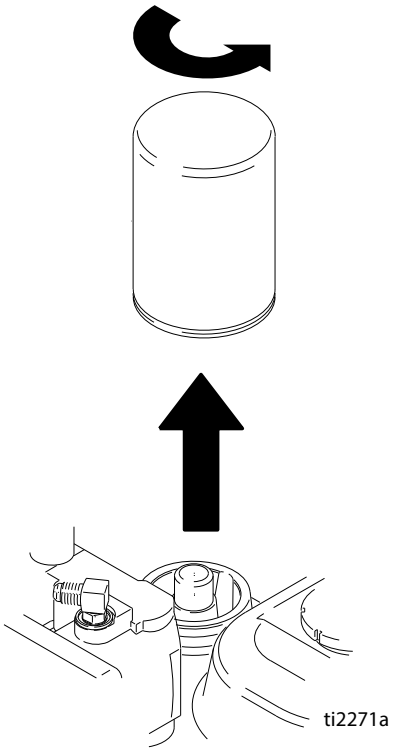

Troubleshooting

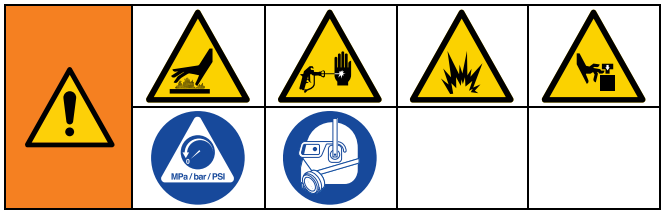

Problem	Cause	Solution
Gas engine pulls hard (won't start).	Hydraulic pressure is too high.	Turn hydraulic pressure knob counterclockwise to lowest setting.
Engine won't start.	Engine switch is OFF.	Turn engine switch ON.
	Engine is out of gas.	Refill gas tank. See Honda Engines Owner's Manual.
	Engine oil level is low.	Try to start engine. Replenish oil, if necessary. See Honda Engine Owner's Manual.
	Spark plug cable is disconnected or damaged.	Connect spark plug cable or replace spark plug.
	Cold engine.	Use choke.
	Fuel shutoff lever is OFF.	Move lever to ON position.
	Oil is seeping into combustion chamber.	Remove spark plug. Pull starter 3 to 4 times. Clean or replace spark plug. Start engine. Keep sprayer upright to avoid oil spill.
Engine operates, but displacement pump does not operate.	Pump Valve is OFF.	Turn Pump Valve ON.
	Pressure setting is too low.	Turn pressure adjusting knob clockwise to increase pressure.
	Fluid filter is dirty.	Clean filter.
	Tip or tip filter is clogged.	Clean tip or tip filter. See spray gun manual.
	Displacement pump piston rod is stuck due to dried paint.	Repair pump. See pump manual.
	Belt worn, broken or off pulley.	Replace.
	Hydraulic fluid too low.	Shut off sprayer. Add Hydraulic fluid.
	Hydraulic motor not shifting.	Set Pump Valve OFF. Turn pressure down. Turn engine OFF. Pry rod up or down until hydraulic motor shifts.
Displacement pump operates, but output is low on upstroke.	Piston ball is not seating.	Service piston ball. See Pump manual.
	Piston packings are worn or damaged.	Replace packings. See Pump manual.

Problem	Cause	Solution
Displacement pump operates but output is low on down stroke and/or on both strokes.	Strainer is clogged.	Clean strainer.
	O-ring in pump is worn or damaged.	Replace o-ring. See Pump manual.
	Intake valve ball is packed with material or is not seating properly.	Clean intake valve. See Pump manual.
	Engine speed is too low.	Increase throttle setting.
	Suction tube air leak.	Tighten suction tube.
	Pressure setting is too low.	Increase pressure.
	Fluid filter, tip filter or tip is clogged or dirty.	Clean filter.
	Large pressure drop in hose with heavy materials.	Use larger diameter hose and/or reduce overall length of hose. Use of more than 100 ft of 1/4 in. hose significantly reduces performance of sprayer. Use 3/8 in. hose for optimum performance (22 ft minimum).
Pump is difficult to prime.	Air in pump or hose.	Check and tighten all fluid connections. Reduce engine speed and cycle pump as slowly as possible during priming.
	Intake valve is leaking.	Clean intake valve. Be sure ball seat is not nicked or worn and that ball seats well. Reassemble valve.
	Pump packings are worn.	Replace pump packings. See Pump manual.
	Paint is too thick.	Thin the paint according to the supplier's recommendations.
	Engine speed is too high.	Decrease throttle setting before priming pump.
High engine speed at no load.	Mis-adjusted throttle setting.	Reset throttle to 3700 - 3800 engine rpm at no load.
	Worn engine governor.	Replace or service engine governor.
Low stall or run pressure shown on display.	New pump or new packings.	Pump break-in period takes up to 100 gallons of material.
	Faulty transducer.	Replace transducer.
Excessive paint leakage into throat packing nut.	Throat packing nut is loose.	Remove throat packing nut spacer. Tighten throat packing nut just enough to stop leakage.
	Throat packings are worn or damaged.	Replace packings. See Pump manual.
	Displacement rod is worn or damaged.	Replace rod. See Pump manual.
Fluid is spitting from gun.	Air in pump or hose.	Check and tighten all fluid connections. Re-prime pump.
	Tip is partially clogged.	Clear tip.
	Fluid supply is low or empty.	Refill fluid supply. Prime pump. Check fluid supply often to prevent running pump dry.
	Insufficient air pressure	Increase motor speed, check spray tip adapter, check air connections.

Problem	Cause	Solution
Excessive leakage around hydraulic motor piston rod wiper.	Piston rod seal worn or damaged.	Replace these parts.
Fluid delivery is low.	Pressure setting too low.	Increase pressure.
	Displacement pump outlet filter (if used) is dirty or clogged.	Clean filter.
	Intake line to pump inlet is not tight.	Tighten.
	Hydraulic motor is worn or damaged.	Bring sprayer to Graco distributor for repair.
	Large pressure drop in fluid hose.	Use larger diameter for shorter hose.
The sprayer overheats.	Paint buildup on hydraulic components.	Clean.
	Oil level is low.	Fill with oil.
Excessive hydraulic pump noise.	Low hydraulic fluid level.	Shut off sprayer. Add fluid.
Gallon (liter) counter not adding fluid volume.	Fluid pressure not high enough.	Must be over 800 psi (55 bar) for counter to add.
	Broken or disconnected pump counter wire, both pumps.	Check wires and connections. Replace any broken wires
	Missing or damaged magnet.	Reposition or replace magnet on pump, see Parts manual (Pump parts) for magnet location.
	Bad sensor, both pumps.	Replace sensor.
Sprayer operates, but display does not.	Bad connection between control board and Display.	Remove Display and reconnect.
	Display damaged.	Replace Display.
Distance not adding properly (Measure mode will be inaccurate and speed will be wrong).	Machine not calibrated.	Perform calibration procedure.
	Rear tire pressure is too low or too high.	Adjust tire pressure to 55 +/- 5 psi (380 +/- 34kPa).
	Gear teeth missing or damaged (right side when standing on platform).	Replace distance gear/wheel hub.
	Distance sensor is loose or broken.	Reconnect or replace sensor.
Mils not calculating or calculates wrong.	Distance sensor.	See “Distance counter not operating properly”.
	Gallon counter.	See “Gallon (liter) counter not adding fluid volume.”
	Line width not entered.	Set line width on main striping screen.
	Bad or damaged control board.	Replace control board.
Fluid spray starts after spray icon is shown on Display.	Interrupter is improperly positioned.	Turn screw counterclockwise until spray icon synchronizes with fluid spray, page 25.
Spray icon does not show on Display when fluid is sprayed.	Loose connector.	Check that 5-pin connector and reed switch are properly connected.
	Interrupter is improperly positioned.	Turn screw counterclockwise until spray icon synchronizes with fluid spray, page 25.

Problem	Cause	Solution
Spray icon is always shown on display.	Interrupter is improperly positioned.	Turn screw clockwise until spray icon is synchronized with fluid spray, page 25.
	Reed switch assembly is damaged.	Replace reed switch assembly.
Pumps are running at largely different speeds	Fluid filter is dirty.	Clean filter.
	Tip, Filter or Manifold is clogged.	Clean components, drill passages.
	Displacement pump is stuck.	Repair pump, see pump manual.
	Impingement ports clogged.	Clean, see **Clean Mix Chamber Impingement Ports**, page 48.
AUTO GUN MODE		
Auto Gun won't actuate when the red button is pressed.	Gun is not activated.	Press the 1 or 2 button on control to activate a gun.
	Cable is not adjusted properly.	Adjust Cable to properly actuate gun trigger, page 26.
	Not on main striping screen.	Go to main striping screen on control to Actuate Auto Guns.
	Low Speed Shut off is enabled.	Disable Low Speed Shutoff, page 42.
	Battery Voltage is too low.	Check Battery voltage on Diagnostic Screen, page 15, or with Volt meter. If below 11.5V, charge Battery or replace Battery.
	Cable is not adjusted properly.	Adjust Cable to properly actuate gun trigger, page 26.
	Red button is broken.	Test button functionality in Diagnostic screen, page 15. Replace if broken.
	Auto Gun Cable is broken or extremely kinked resulting in too much drag.	Replace Auto Gun Cable.
	Solenoid wire is disconnected or broken.	Check Wiring Diagram, page 92, repair or replace wires if necessary.
	Fuse to Battery is removed or blown.	Check and replace fuse.
	Solenoid is jammed.	Spray Lubrication on solenoid plunger.
	Solenoid is failed.	Check resistance across solenoid wires. Resistance should be between .2 and .26 ohms. If it's not, replace solenoid.
	Control board is failed.	Replace Control board.
	Gun is not receiving air.	Check air pressure. Open air valve on gun.
	Air pressure too low.	Increase motor speed, check air connections & spray tip adapter.
Line Spacing is not accurate	Wrong line pattern loaded.	Reload the correct pattern.
	Machine is out of calibration.	Calibrate the machine, page 21.

Problem	Cause	Solution
Battery won't stay charged.	Accessories are left on and drain the Battery when unit is not running.	Turn off accessories when machine is not in use.
	Throttle is not set high enough.	Make sure engine is being ran above 3300 rpm, NO LOAD for proper power supply.
	Power consumption from accessories is higher than engine output.	Reduce accessories or charge Battery when necessary.
	Wiring is broken or disconnected.	Check Wiring Diagram, page 92, repair or replace wires if necessary.
	Charger is not working.	Check Charging state in diagnostics, page 38, to see if charger is properly working. Replace Board.
Auto Gun won't shut off	Cable is kinked.	Repair or replace cable.
	Solenoid is jammed.	Lubricate solenoid plunger, Check for solenoid damage.
	Low air pressure.	Increase motor speed, check air connections.
LAYOUT MODE		
No dots or poor dots in Layout and Marking Mode.	Too small of Dot setting.	Increase Dot size, page 38.
	Gun is not activated.	Press the 1 or 2 button on control to activate a gun.
	Cable is not adjusted properly.	Adjust Cable to properly actuate gun trigger, page 26.
	Tip clog.	Clear tip or Replace tip.
	Battery voltage is too low.	Charge Battery or replace Battery.

Gun Troubleshooting



1. Follow the **Pressure Relief Procedure**, page 14, before checking or servicing the gun.
2. Check all possible problems and causes before disassembling the gun.

NOTICE

To prevent cross-contamination in the gun, do not interchange A and B component Methyl-Methacrylate (MMA). Cross-contamination can result in cured material in the gun. Cured material may damage the sealing surfaces, block fluid passages, and prevent gun function.

Problem	Cause	Solution
Gun does not fully actuate when triggered	The safety lock is engaged.	Disengage safety lock. See **Piston Safety Lock**, page 11.
	The muffler is plugged.	Clean the muffler. See **Clean Muffler**, page 54.
	The air valve o-rings are damaged.	Replace the air valve o-rings. See **Inspect the Air Valve**, page 55.
	Cured material is inside the cartridge.	Inspect the fluid cartridge and mix chamber for scratches. See **Inspect the Fluid Cartridge**, page 50. Replace.
	The retaining ring is not bottomed out.	Tighten retaining ring until bottomed out.
Fluid does not spray when the gun is fully actuated	The fluid valves are closed.	Open the fluid valves.
	The impingement ports are plugged.	Clean the impingement ports. See **Clean Mix Chamber Impingement Ports**, page 48.
	The check valves are plugged.	Clean the check valves. See **Inspect the Check Valves**, page 47.
	The cartridge is plugged.	**Remove the Fluid Cartridge**, page 49, then **Test Fluid Cartridge Restriction**, page 50
Gun actuates slowly	The muffler is plugged.	Clean the muffler. See **Clean Muffler**, page 54.
	The piston o-rings are damaged.	Replace the piston o-rings. See **Parts Drawing - Gun**, page 74.
	The air valve is dirty, or the o-rings are damaged.	Clean air valve or replace o-rings. See **Inspect the Air Valve**, page 55.
Gun delays, then actuates abruptly.	Chemical or material has cured around the side seals in the fluid cartridge.	See **Inspect the Fluid Cartridge**, page 50. Replace.
	The retaining ring is not bottomed out.	Tighten retaining ring until bottomed out.
	Cured material is inside the cartridge.	Inspect the fluid cartridge and mix chamber for scratches. See **Inspect the Fluid Cartridge**, page 50. Replace.
	The retaining ring is not bottomed out.	Tighten retaining ring until bottomed out.

Problem	Cause	Solution
Loss of round pattern.	The mix chamber nozzle is dirty.	Clean the mix chamber nozzle. See **Clean Spray Tip Adapter and Mix Chamber Nozzle**, page 46.
Loss of flat pattern.	The spray tip is plugged.	Clean in compatible solvent. **Clean Spray Tip Adapter and Mix Chamber Nozzle**, page 46
	The tip is worn.	Replace the flat spray tip.
	The mix chamber nozzle is dirty.	Clean the mix chamber nozzle. See **Clean Spray Tip Adapter and Mix Chamber Nozzle**, page 46**.**
Leakage between flat tip and mix chamber.	The tip is not seated properly.	Reassemble. See **Clean Spray Tip Adapter and Mix Chamber Nozzle**, page 46.
	The o-ring s damaged or missing.	Replace the flat spray tip o-ring.
Pressure imbalance.	The impingement ports are plugged.	Clean the impingement ports. See **Clean Mix Chamber Impingement Ports**, page 48.
	The check valves are plugged.	Clean the check valves. See **Inspect the Check Valves**, page 47.
	The viscosities not equal.	Adjust temperature to compensate.
	The cartridge is plugged.	**Remove the Fluid Cartridge**, page 49, then **Test Fluid Cartridge Restriction**, page 50.
A and/or B fluid inside of the cartridge.	The side seals in the fluid cartridge are damaged.	Replace. See **Inspect the Fluid Cartridge**, page 50.
	The mix chamber is damaged.	Replace. See **Remove the Fluid Cartridge**, page 49.
	The side seal o-rings in the fluid cartridge are damaged.	Replace the fluid cartridge. See **Inspect the Fluid Cartridge**, page 50.
	The spray tip adapter is tightened while the fluid valves are open.	Close valves first.
Fluid mist from mix chamber or spray tip adapter.	The side seals in the fluid cartridge are damaged.	Replace. See **Inspect the Fluid Cartridge**, page 50.
	The side seal o-rings in the fluid cartridge are damaged.	Replace the side seal o-rings. **Inspect the Fluid Cartridge**, page 50.
	The mix chamber is damaged.	Replace the mix chamber. See **Remove the Fluid Cartridge**, page 49.
Excessive overspray.	Too much cleanoff air.	Reduce cleanoff air.
Rapid buildup of material on spray tip adapter.	The spray tip adapter holes are plugged.	Clean the spray tip adapter holes. See **Clean Spray Tip Adapter**, page 52.
	Too little cleanoff air.	Increase cleanoff air.
	The fluid cartridge front o-ring is damaged or missing.	Replace the fluid housing o-ring. See **Parts Drawing - Gun**, page 74.
	The front o-ring is damaged.	Replace the front o-ring. See **Parts Drawing - Gun**, page 74.
Reduced cleanoff air.	The front o-ring is damaged.	Replace the front o-ring. See **Parts Drawing - Gun**, page 74.

Problem	Cause	Solution
Excessive cleanoff air when fluid valves are closed and gun is triggered.	The fluid cartridge front o-ring is damaged or missing.	Replace the fluid cartridge front o-ring only. See **Parts Drawing - Gun**, page 74.
Fluid does not shut off when fluid valves are closed.	The fluid valves are damaged.	Replace the fluid valves. See **Parts Drawing - Gun**, page 74.
Burst of air from muffler when gun is triggered.	Normal.	No action required.
Steady air leakage from muffler.	The air valve o-rings are damaged.	Replace the valve o-rings. See **Inspect the Air Valve**, page 55.
	The piston o-rings are damaged.	Replace the piston o-rings. See **Parts Drawing - Gun**, page 74.
Air leakage from front air valve.	The air valve o-rings are damaged.	Replace the valve o-rings. See **Inspect the Air Valve**, page 55.
Air leak around lock ring.	The o-ring is damaged.	Replace the o-ring. See **Parts Drawing - Gun**, page 74.
Cannot tighten retaining ring (9) until it bottoms out.	The spray tip adapter was assembled before retaining ring.	Install retaining ring (9) first, then spray tip adapter (10). See **Assemble the Spray Gun**, page 15.
Excessive air leaking from sides of gun.	The retaining ring is loose.	Tighten retaining ring.
	The o-ring is missing on back of cartridge.	Replace o-rings. See **Parts Drawing - Gun**, page 74.
	The rear cartridge OD o-ring is damaged or missing.	Replace o-ring. See **Parts Drawing - Gun**, page 74.
Fluid or chemical is leaking from sides of gun.	The fluid o-ring are damaged or missing.	Replace o-ring. See **Parts Drawing - Gun**, page 74.

Drill Bit Kits

Reference **Clean Passages**, page 54, for cleaning gun ports and orifices. Illustrations are for diameter comparison. Actual length may vary.

NOTE: Not all sizes are used with your gun.

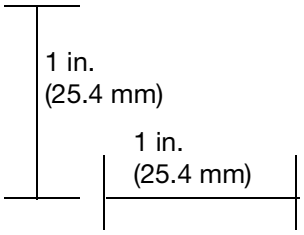

Kit Part No.	Qty in Kit	Drill Bit Size			Illustration
		nominal	in.	mm	
246624	3	3/32	.094	2.39	
246627	6	#53	.060	1.52	
246630	6	#69	.029	0.74	

Drill Bit Kit

119386

Kit includes 20 cleanout drill bits ranging in sizes of #61 through #80.

Air Purge Handle Cleanout Drill Kit

248969

Kit includes all 5 drill bits of extra long length needed to clean out the air passages in the Air Purge Gun Handle and Fluid Housing. See **Clean Passages**, page 54.

LineLazer V 200MMA 1:1

Component Parts Drawings

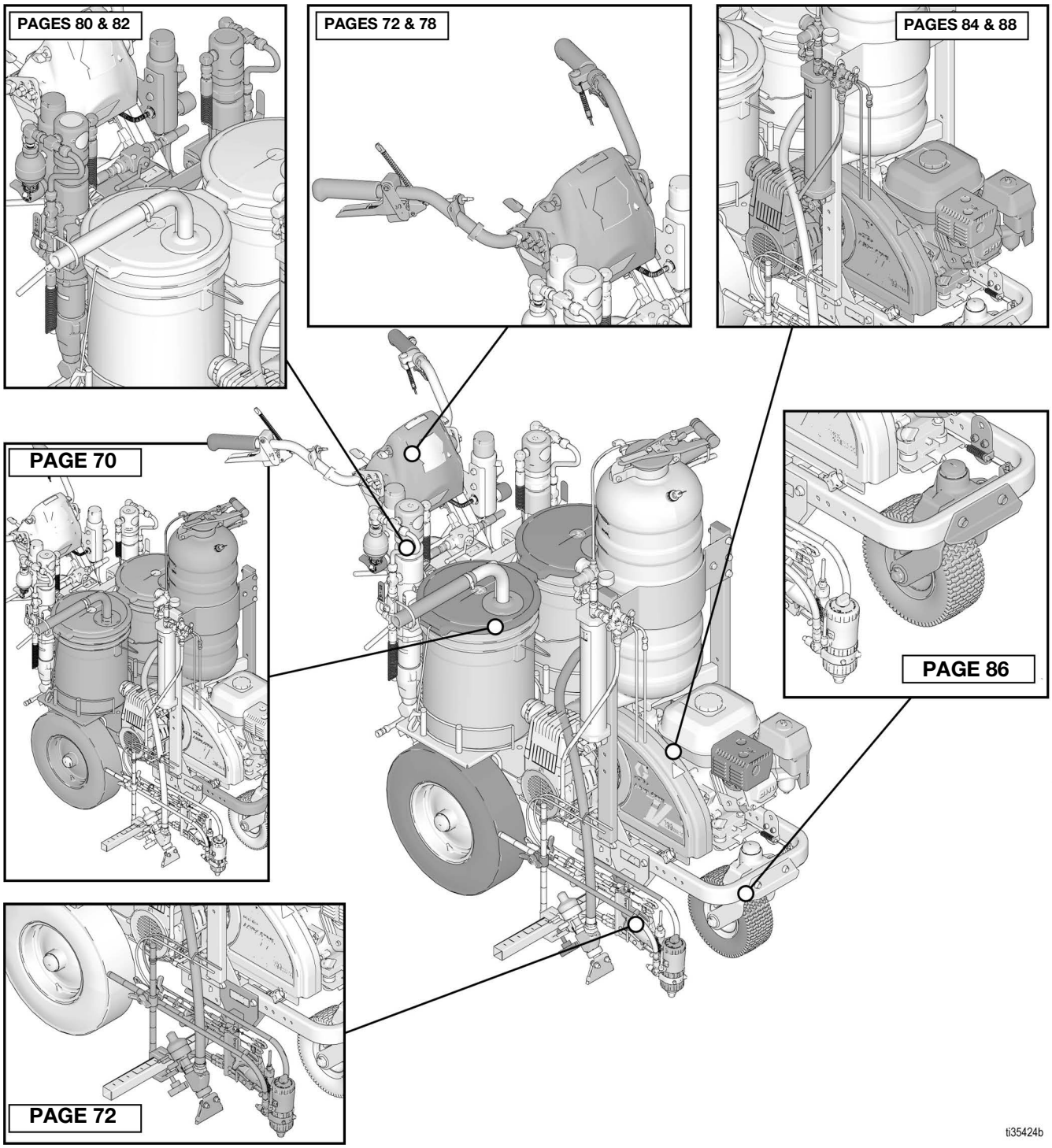

Parts Drawing - Frame Assembly

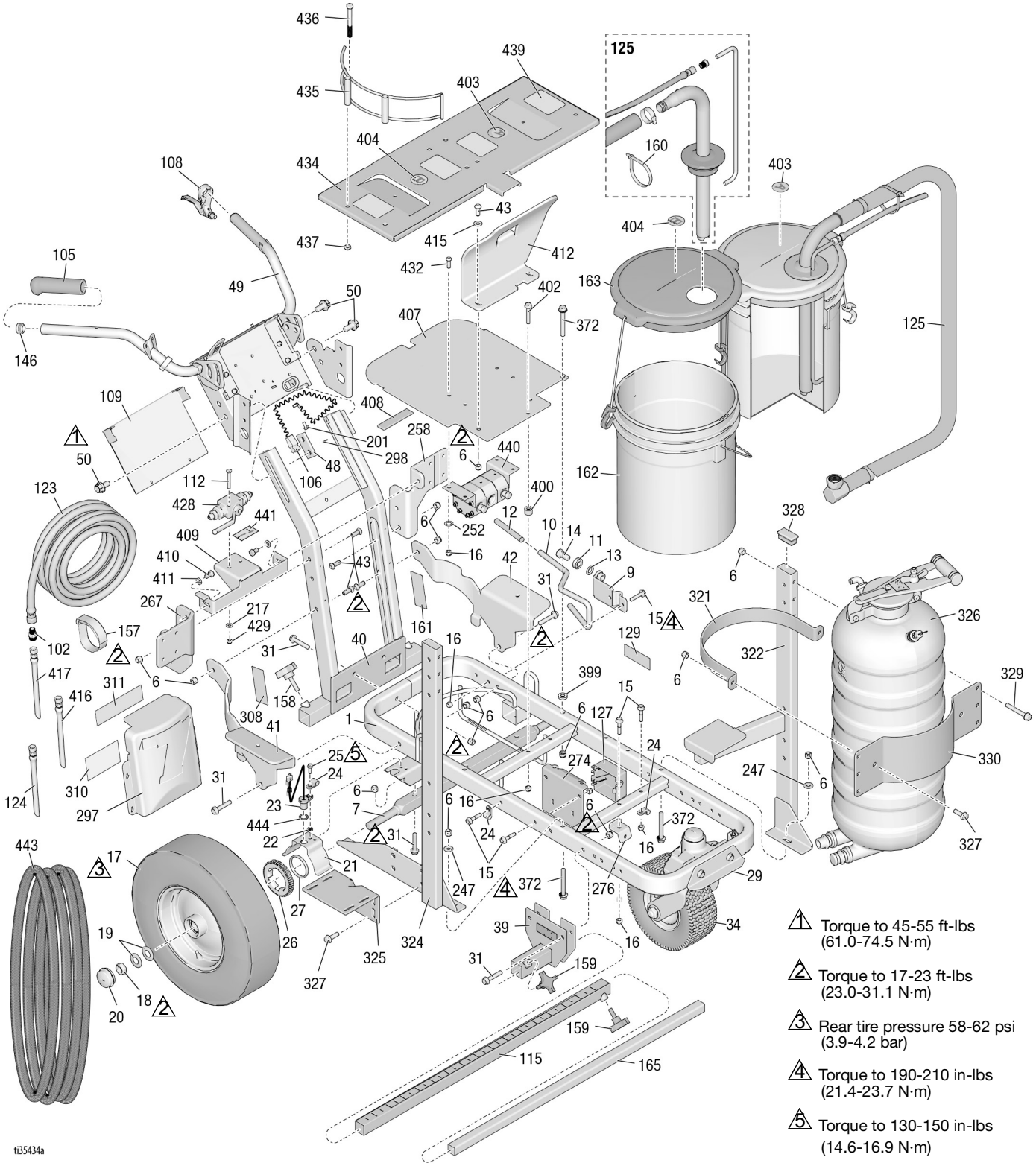

1 Torque to 45-55 ft-lbs (61.0-74.5 N·m)

2 Torque to 17-23 ft-lbs (23.0-31.1 N·m)

3 Rear tire pressure 58-62 psi (3.9-4.2 bar)

4 Torque to 190-210 in-lbs (21.4-23.7 N·m)

5 Torque to 130-150 in-lbs (14.6-16.9 N·m)

Parts List - Frame Assembly

Ref.	Part	Description	Qty.
1	287623	FRAME, linestriper, painted	1
6	101566	NUT, lock	12
7	193405	AXLE	1
9	198891	BRACKET	1
10	198930	ROD, brake (includes 12)	1
11	198931	BEARING	1
12	114808	CAP, vinyl	1
13	195134	SPACER	1
14	113961	SCREW, cap, hex hd	1
15	112960	SCREW, flange, hex	5
16	111040	NUT, lock, insert, nylock, 5/16	8
17	111020	WHEEL, pneumatic w/o sensor ring	1
	255162	WHEEL, pneumatic w/ sensor ring	1
18	112405	NUT, lock	2
19	112825	WASHER	4
20	114648	CAP, dust	2
21	15J088	SHIELD, distance sensor	1
22	15K452	SPACER, round	1
23	15K357	SENSOR, distance	1
24	108868	CLAMP, wire	2
25	260212	SCREW, hex washer hd, thd form	2
26	15J578	GEAR, signal	1
27	15K700	RING, sensor gear	1
29	240991	BRACKET, caster, front	1
31	114982	SCREW, cap, flange hd	6
34	114549	WHEEL, pneumatic	1
39	17H528	BRACKET, gun arm	1
40	24Y665	FRAME, handle upright, painted	1
41	17Y059	BRACE, right, painted	1
42	17Y058	BRACE, left, painted	1
43	128977	SCREW, cap button hd	6
48	17J125	BRACKET, slide	2
49	24Y641	BAR, handle	1
50	17J136	SCREW, hex, flange head	8
102	196176	ADAPTER, nipple	2
105	114659	GRIP, handle	2
106	237686	WIRE, ground	1
107	107257	SCREW, thread forming, hex hd	1
108	194310	LEVER	1
109	17J123	PLATE, cover	1
112	110982	SCREW, cap, hex	2
115	17J407	ARM, extension, bar, weldment	1
123	191239	HOSE, cpld, 3/8” x 11’10”	2
124	245227	HOSE, cpld, 1/4” x 7’	2
125	24V064	HOSE, suction / drain (includes 125a-125i)	2
125a	15F149	TUBE, suction	2
125b	194306	HOSE, fluid	2
125c	198119	FITTING, elbow, barbed	2
125d	101818	CLAMP, hose	2
125f	16X071	TUBE, drainline	2
125g	278722	GASKET, pail	2
125h	248008	HOSE, cpld, 1/4” x 44”	2
125i	196180	BUSHING	2
127	15F369	BOX	1
129	189919	BLANK, label, kit	2
146	120151	PLUG, tube	2
157	114271	STRAP, retaining	2
158	108471	KNOB, pronged	1
159	111145	KNOB, pronged	2
160	404989	STRAP, tie	6
161▲	17K394	LABEL, safety warning	1
162	115077	PAIL, plastic	2
163	24U241	KIT, pail, cover	2
165	17J408	ARM, extension, third gun	1
201	107257	SCREW, thd, forming	11
217	110755	WASHER, plain	4
247	100023	WASHER, flat	7
252	100527	WASHER, plain	6
258	17y409	BRACKET, mount, pump, hydraulic	1
267	17Y047	BRACKET, mount, pump, hydraulic, right	1
274	17J549	BRACKET, reservoir	1
276	15F441	BRACKET, frame	1
277	119696	SPRING, extension	1
297	17K377	COVER, battery, painted	1
308▲	17K392	LABEL, safety, warning	1
310	17K397	LABEL, notice, electrical usage	1
321	16T580	BAND, clamping, bead tank	1
322	16T763	FRAME, tank, LL200, painted, left	1
324	16T762	FRAME, bead tank, LL200, painted, right	1
325	16T579	BRACKET, compressor, LL200	1
326	16T629	TANK, bead	1
327	111193	SCREW, cap, flang hd	6
328	115087	PLUG, tubing	2
329	121488	SCREW, hex hd, flanged	6
330	16T593	BRACKET, bead tank, LL200, painted	1
331	120757	SCREW, carriage	4
372	125626	SCREW, hex hd, flanged	4
399	16A719	WASHER, flat	1
400	197449	SPACER	1
402	114653	SCREW, cap, flange head	1
403	17Y328	LABEL, identification, letter “A”	4
404	17Y329	LABEL, identification, letter “B”	4
407	17Y054	PLATE, bucket holder	1
408	17P800	BUMPER, (.88 wide x .17 thick)	4
409	17Y350	BRACKET, reservoir, support, rear, MMA	1
410	100133	WASHER, lock 3/8	2
411	100575	SCREW, cap, hex hd	2
412	17Y055	SUPPORT, reservoir, front	1
415	100731	WASHER	1
416	17C466	TUBE, poly, heat-shrink, green	2
417	17C465	TUBE, poly, heat-shrink, blue	2
428	120140	VALVE, ball, assembly	1
429	110982	SCREW, cap, hex hd	2
432	125112	SCREW, cap, btn hd, 5/16 x 1	4
434	25N603	KIT, bracket, 5 gallon, dual color	1
435	17N536	HOLDER, bucket	4
436	867517	SCREW, hex head, 3/8-16 x 3.5”	8
437	125205	NUT, lock, nylon, 3/8-16	8
439	15R409	PAD, non-slip, brake	4
440	131818	MANIFOLD, flow drivider, hydraulic	1
441	17Y487	LABEL, instructions, valve	1
443	16M606	JACKET, blue, 14’	1

▲ *Replacement safety labels, tags, and cards are available at no cost.*

Parts Drawing - Gun Arm & Gun Trigger

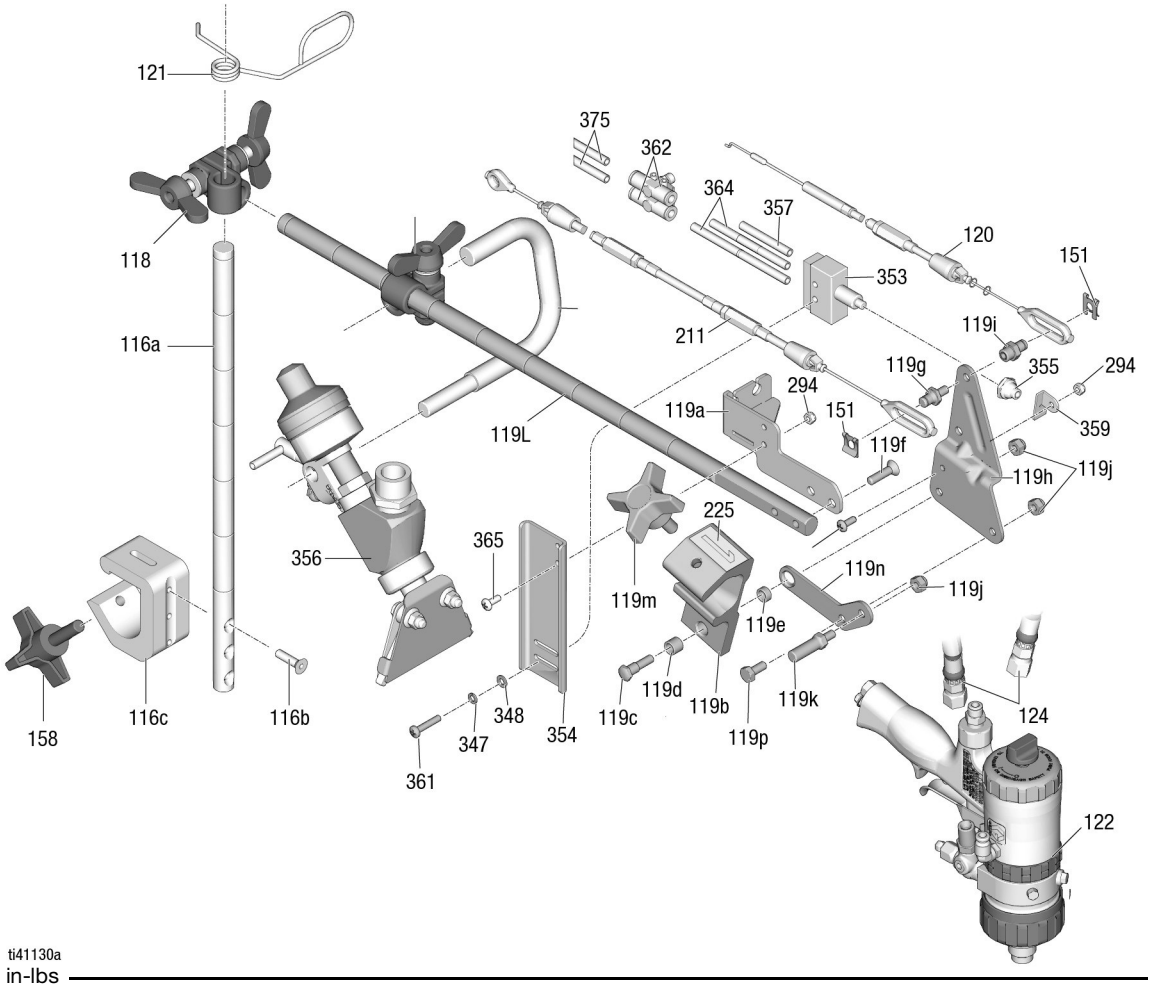

ti41130a

⚠ Torque to 18-22 in-lbs (2.0-2.4 N·m)

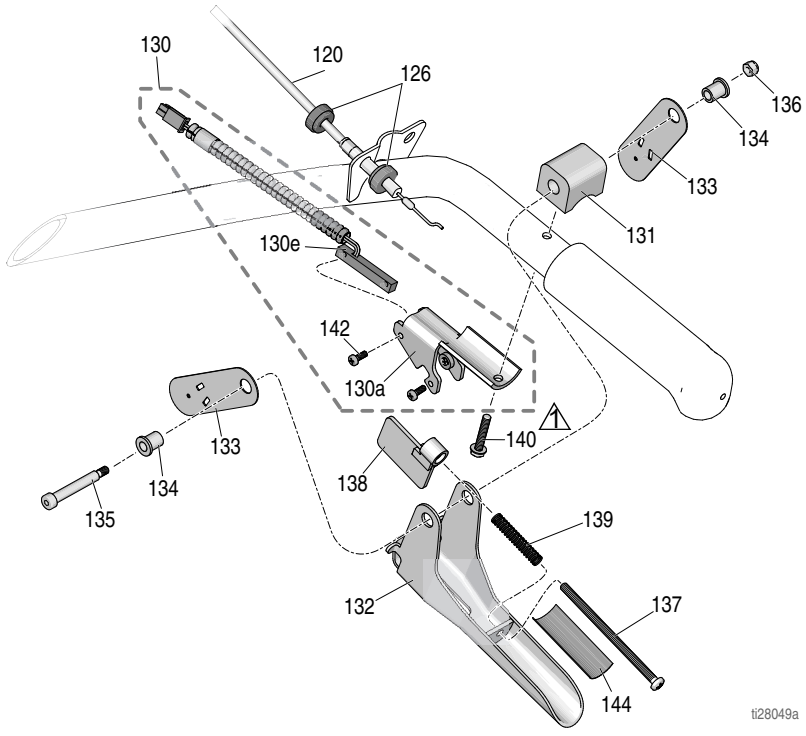

ti28049a

Parts List

Gun Holder and Arm

Ref.	Part	Description	Qty.
6	101566	NUT, lock (not shown)	2
31	114982	SCREW, cap, flange hd (not shown)	2
39	17H528	BRACKET, gun arm (not shown)	1
115	17J407	ARM, extension, bar (not shown)	1
116	17J424	BAR, height adjustment, assy	1
116a	17J139	BAR, gun, height, adjustment	1
116b	113428	SCREW, mach, hex, hd	3
116c	17J153	BRACKET, gun holder	1
118	24Y645	KIT, clamp, double wing nut	1
119	25E461	ARM, gun holder, linelazer	1
119a	24Y919	BRACKET, cable	1
119b*	17Y418	HOLDER, gun	1
119c	17J575	FASTENER, special	1
119d*	119664	BEARING, sleeve	1
119e	17J576	SPACER, special	1
119f	119647	SCREW, cap, socket	2
119g	17H673	STUD, cable, gun	1
119h	15F214	LEVER, actuator	1
119i	17H674	ADAPTER, cable, gun	1
119j	102040	NUT, lock hex	2
119k	15F209	STUD, pull, trigger	1
119l	17J145	ARM, holder, gun	1
119m*	15F750	KNOB, holder, gun	1
119n	131827	BRACKET, gun, support	1
119p	100270	SCREW, cap, hex hd	1
120	25A488	CABLE, gun, manual (includes 126, 151)	1
121	188135	GUIDE, cable	1
122	25U857	GUN, air purge, MMA, PC	1
124	245227	HOSE, coupled 1/4” x 7’	2
128▲	16P136	LABEL, safety, warning	1
151	126111	RETAINER, cir clip, external, 8mm	2
158	108471	KNOB, pronged	1
159	111145	KNOB, pronged (not shown)	2
165	17J408	ARM, extension, third gun (not shown)	1
211	25A487	CABLE, gun, automatic (includes 151, 212, 213)	1
225	17C043	LABEL, number “1”	1
	17C046	LABEL, number “2”	1
294	115483	NUT, lock	2
347	100020	WASHER, lock	2
348	116876	WASHER, flat	2
353	16T646	SWITCH, air	1
354	16T804	BRACKET, switch, air	1
355	16T771	BOOT, button, push	1
356	16R963	KIT, gun, bead, sub-assembly	1
357	16U274	HOSE, pneumatic	1
359	16T816	BRACKET, switch, air	1
361	104387	SCREW, mach, pnh	2
362	16V046	RESTRICTOR, air flow, adjustable	2
364	16V047	HOSE, pneumatic	2
365	116610	SCREW, mach, phil, pan, #10	2
375	190010	TUBE	2

** Included in Gun Holder Repair Kit 17Y878*

▲ Replacement safety labels, tags, and cards are available at no cost.

Gun Trigger

Ref.	Part	Description	Qty.
120	25A488	CABLE, gun, manual (includes 126, 151)	1
126	15F624	NUT, cable, gun (knurled)	2
130	25A636	BRACKET, trigger w switch	1
130a	276907	BRACKET, magnet	1
130e	17J237	SWITCH, reed	1
131	198896	BLOCK, mounting	1
132	245676	HANDLE	1
133	198895	PLATE, lever, pivot	2
134	111017	BEARING, flange	2
135	116941	SCREW, shoulder, skt hd	1
136	116969	NUT, lock	1
137	112381	SCREW, mach, pan head	1
138	117268	BRACKET, interrupter	1
139	117269	SPRING	1
140	128803	SCREW, thd forming, hex washer	1
142	117317	SCREW, plastite, pan head	2
144	17K587	LABEL, notice, adjustment	1

Parts Drawing - Gun

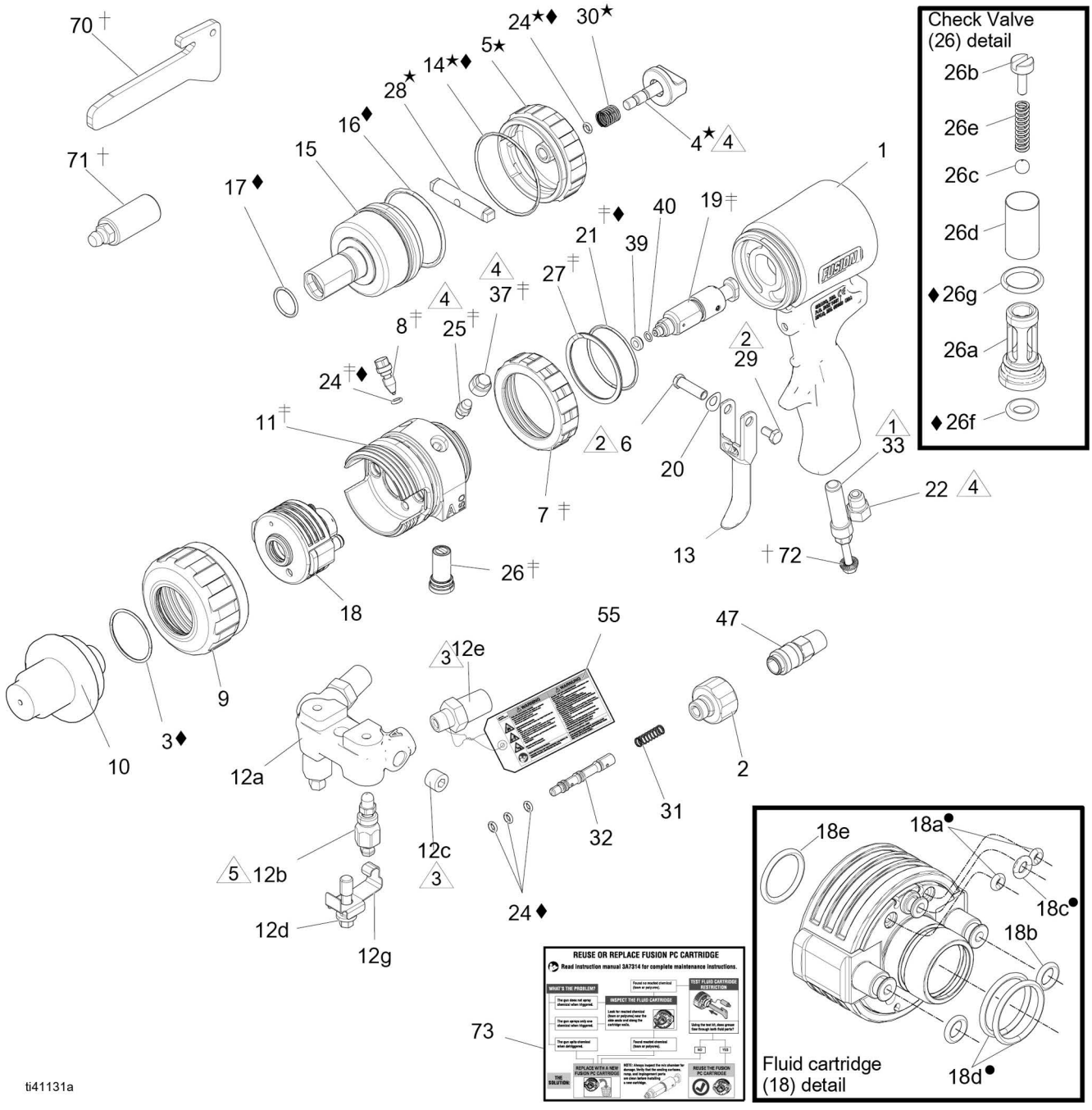

1 Torque to 125-135 in-lb (14-15 N•m).

2 Torque to 20-30 in-lb (2.3-3.4 N•m).

3 Torque to 235-245 in-lb (26.6-27.7 N•m).

4 Torque to 35-45 in-lb (4-5 N•m).

5 Torque to 32-40 ft-lb (43-54 N•m).

Parts List - Gun

Ref.	Part	Description	Qty.
1	17Y546	HANDLE	1
2	15B208	PLUG, air valve	1
3◆	248137	O-RING, PTFE, package of 6	1
4★	15B206	LOCK, safety	1
5★	15B204	CAP, cylinder	1
6	192272	PIN	1
7‡	26C775	RING, lock, Fusion PC, blue	1
8‡	15B223	VALVE, cleanoff air	1
9	19Y302	RING, retaining, front, Fusion PC	1
10	17Y509	ADAPTER, tip	1
11‡	- - - -	HOUSING, fluid, Fusion PC	1
12	246012	MANIFOLD, fluid, 2-hose, includes 12a-12g	1
12a	- - - -	MANIFOLD	1
12b	246356	VALVE, fluid	2
12c	100139	PLUG, pipe; 1/8-27 npt	2
12d	15B221	BOLT, 5/16-24	1
12e	151519	SWIVEL, B side; 1/8 npt(m) x number 6 JIC(f)	1
12f	117635	SWIVEL, A sid,; 1/8 npt(m) x number 5 JIC(f)	1
12g	15B993	SPRING, ring, lock	1
13	15B209	TRIGGER	1
14★◆	248136	O-RING, cylinder cap, package of 6	1
15	15B203	PISTON	1
16◆	248135	O-RING, piston; package of 6	1
17◆	248134	O-RING, piston shaft; package of 6	1
18	- - - -	CARTRIDGE, Fusion PC; see **Cartridge Kits**, page 91	3
18a•	- - - -	O-RING, face	1
18b	25P851	O-RING, fluid, pack of 6	1
18c•	- - - -	O-RING, air	1
18d•	- - - -	O-RING, rear	1
18e	248131	O-RING, front, pack of 6	1
19	25V431	CHAMBER, mix (includes 39, 40)	1
20	15C480	WASHER, wave	1
21‡◆	248132	O-RING; pack of 6	1
22	119626	MUFFLER	1
23	248131	O-RING, pack of 6	1
24‡★◆	246354	O-RING, pack of 6	1
25‡	100846	FITTING, grease	1
26‡	246731	VALVE, check, A side, includes 26a-26g	1
	246352	VALVE, check, B side, includes 26a-26g	1
26a	- - - -	HOUSING	1
26b	15B214	SCREW, 5/16-18 x 1/2 in. (13 mm)	1
26c	257420	BALL; carbide, package of 10	1
26d	246357	KIT, repair, screen, 40 mesh	1
26e	117490	SPRING	1
26f◆	248133	O-RING, check valve face, package of 6	1
26g◆	248129	O-RING, check valve housing; package of 6	1
27‡	116550	RING, retaining	1
28★	15B205	STOP, piston	1
29	203953	SCREW, 10-24 x 3/8 in. (10 mm)	1
30★	114070	SPRING	1
31	117485	SPRING	1
32	15B202	SPOOL, valve	1
33	26C937	PLUG, Fusion PC tool holder, 1/4 NPT	1
35	117509	QUICK-DISCONNECT, male, air, 1/4 npt(m), round and flat pattern guns only	1
36▲	222385	CARD, warning, not shown	1
37‡	15B689	COVER, grease fitting	1
39	248018	SEAL, pack of 5	1
40	246360	O-RING, PTFE, pack of 3	1
46	117792	GREASE GUN, not shown	1
47	128637	FITTING, 1/4”	1
55▲	172479	TAG, warning	1
56	15D235	SIGN, instruction, not shown	1
57	117773	GREASE CARTRIDGE, 3 oz, not shown. SDS available at www.graco.com.	1
58	248279	GREASE, tube, 4 0z, not shown. SDS available at www.graco.com.	1
70†	- - - -	TOOL, divider	1
71†	- - - -	TOOL, grease	1
72†	- - - -	SCREW, jack	1
73	26A955	LABEL, instruction	1

▲Replacement safety labels, tags, and cards are available at no cost.

Symbol	Kit	Description	Included in Kit: Ref. (Qty.)
•	25P850	KIT, cartridge, o-rings, (non-chemically resistant)	18a (2), 18c (1), 18d (2)
†	25P660	KIT, Fusion PC, cartridge, tools	70 (1), 71 (1), 72(1)
‡	19Y303	KIT, fluid housing, Fusion PC	11(1), 24 (1), 8 (1), 25 (1), 37 (1), 27 (1), 21 (1), 26; A and B side (2), 7 (1)
★	248064	ASSEMBLY, safety stop	4 (1), 5 (1), 14 (1), 24 (1), 28 (1), 30 (1)
◆	18C115	KIT, Fusion PC, gun o-rings	3 (1), 14 (1), 16 (1), 17 (1), 21 (1), 24 (5), 26f (2), 26g (2)

Detail Views - Gun

Flush Manifold Detail

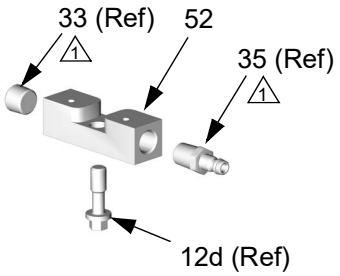

Supplied Tools

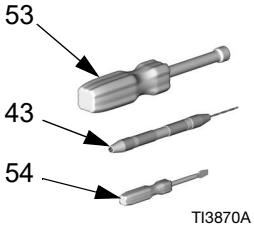

1 Torque to 125-135 in-lb (14-15 N•m).

Mix Chamber O-ring Detail

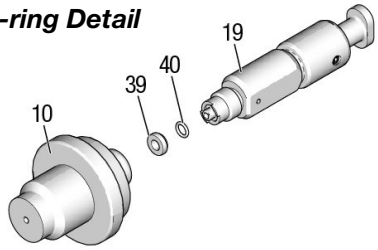

Ref.	Part No.	Description	Qty.
52	15B817	MANIFOLD, gun flush; round and flat pattern guns only	1
53	117642	NUT DRIVER, hex; 5/16	1
54	118575	SCREWDRIVER; 1/8 blade	1
55▲	172479	TAG, warning; not shown	1
57	117773	GREASE CARTRIDGE; 3 oz; not shown; MSDS sheet available at www.graco.com	1

▲ *Replacement safety labels, tags, and cards are available at no cost.*

Notes

Parts Drawing - Handle/Controls

NOTICE

Do not allow the solenoid wires to make a sharp bend as shown. Doing so may lead to wire breakage. Place an approximate 0.75" radius bend in the wires exiting the solenoid.

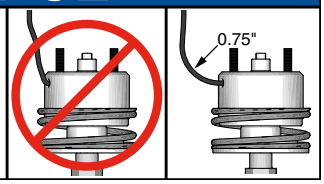

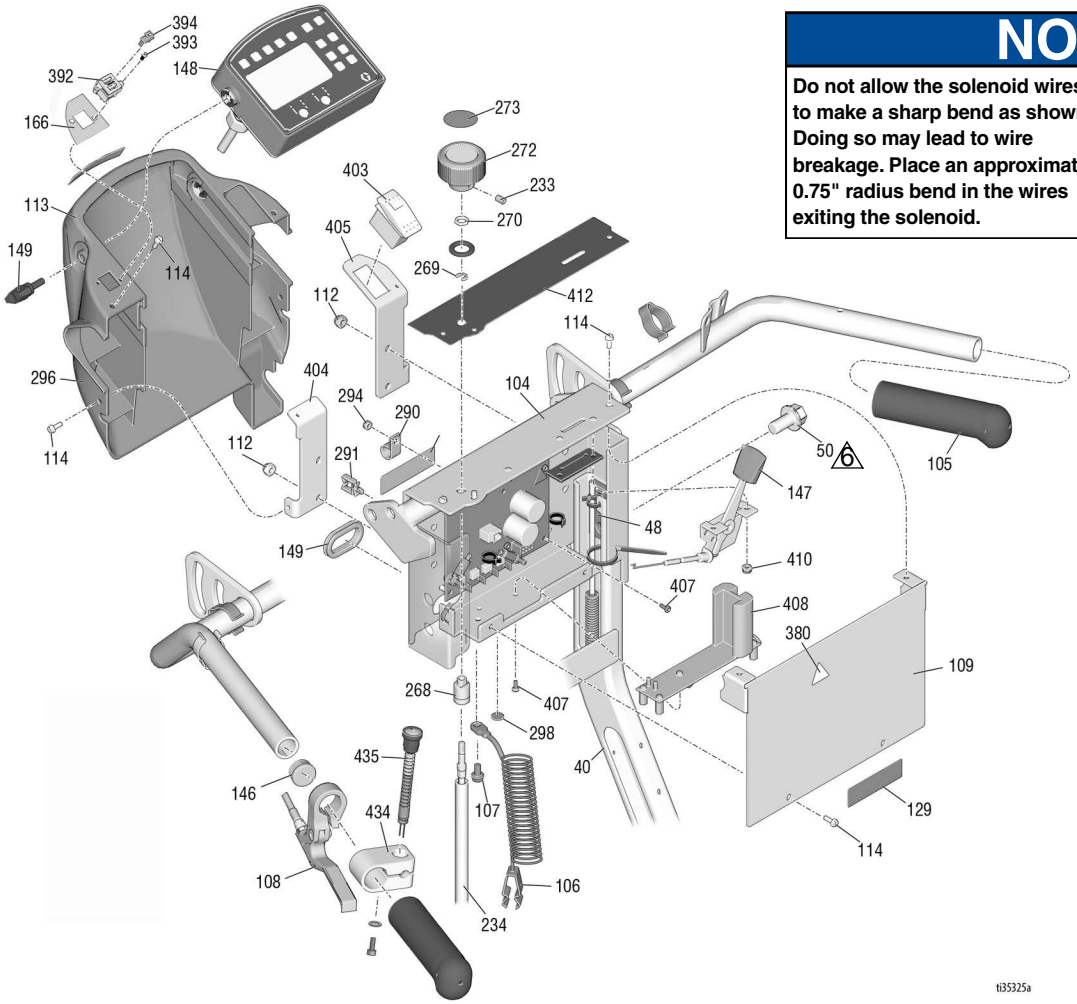

6 Torque to 18-22 in-lbs (2.0-2.4 N·m)

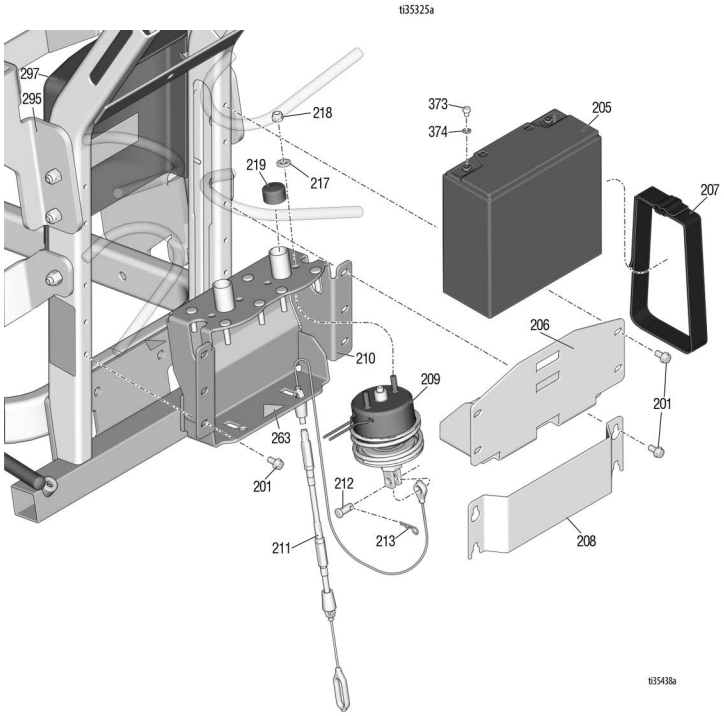

Parts List - Handle/Controls

Ref.	Part	Description	Qty.
40	24Y665	FRAME, handle upright, painted	1
48	17J125	BRACKET, slide	2
50	17J136	SCREW, hex, flange head	8
104	17J120	PLATE, control	1
105	114659	GRIP, handle	2
106	237686	WIRE, ground, assy.	1
107	107257	SCREW, thd forming	1
109	17J123	PLATE, cover	1
112	102040	NUT, lock, hex	4
113	17V517	COVER, control, usb, painted	1
114	128978	SCREW, mach, slot hex wash hd	12
129	189919	KIT, blank, label	1
146	120151	PLUG, tube	2
147	17J134	CONTROL, throttle	1
148	25N791	BOX, control assembly (includes 149)	1
149	17H701	GROMMET, oval	1
149	16W408	KNOB, t-handle, 1/4-20 thd stud	2
166	17V520	LABEL, usb	1
169	17J617	WIRE, harness	1
201	107257	SCREW, thd forming	10
205	24X370	BATTERY, 22 AH, sealed (includes 373, 374)	1
206	17H644	SHELF, battery	1
207	126949	STRAP, battery	1
208	17H650	COVER, solenoid, automatic	1
209	25A486	SOLENOID, module	1
210	24Y777	BRACKET, solenoid	1
211	24A487	CABLE, gun, solenoid, auto (includes 151, 212, 213)	1
212	128711	PIN, clevis, 5/16	1
213	15R598	CLIP, cotter, hairpin	1
217	110755	WASHER, plain	2
218	121114	NUT, hex, self locking	2
219	128712	CAP, dust cover	2
233	101962	SCREW, set, sch	2
234	25A255	SHAFT, flexible	1
263▲	15H108	LABEL, safety, warning, pinch	1
268	17H698	BUSHING, pressure control, mount	1
269	119775	NUT, panel	1
270	115999	RING, retaining	1
272	16Y408	KNOB, pressure control	1
273	15A464	LABEL, control	1
290	128856	CLAMP	2
291	114687	CLIP, retainer	2
294	115483	NUT, lock	2
295	17K378	LABEL, brand, LLV, battery cover	1
296	17K379	LABEL, brand, console, shroud	1
297	17K377	COVER, battery, painted	1
298▲	16W503	LABEL, safety, ground	1
310	17K397	LABEL, notice, electrical usage	1
311▲	17K396	LABEL, safety	1
373	128131	SCREW, cap, hex head	2
374	111307	WASHER, lock, external	2
380▲	189930	LABEL, warning	1
392	172084	BOARD, assembly (includes 166, 393, 394)	1
393	17V519	SCREW, pan hd	2
394	131718	COVER, dust, usb	2
403	128855	SWITCH, rocker	1
404	17J126	BRACKET, shroud	1
405	17J128	BRACKET, switch	1
407	120593	SCREW, mach, torx pan hd	4
410	109466	NUT, lock, hex	2
412	17J456	LABEL, control	1
434	15K162	BLOCK	1
435	17J236	SWITCH, push button	1

▲ *Replacement safety labels, tags, and cards are available at no cost.*

Parts Drawing - Filters A & B

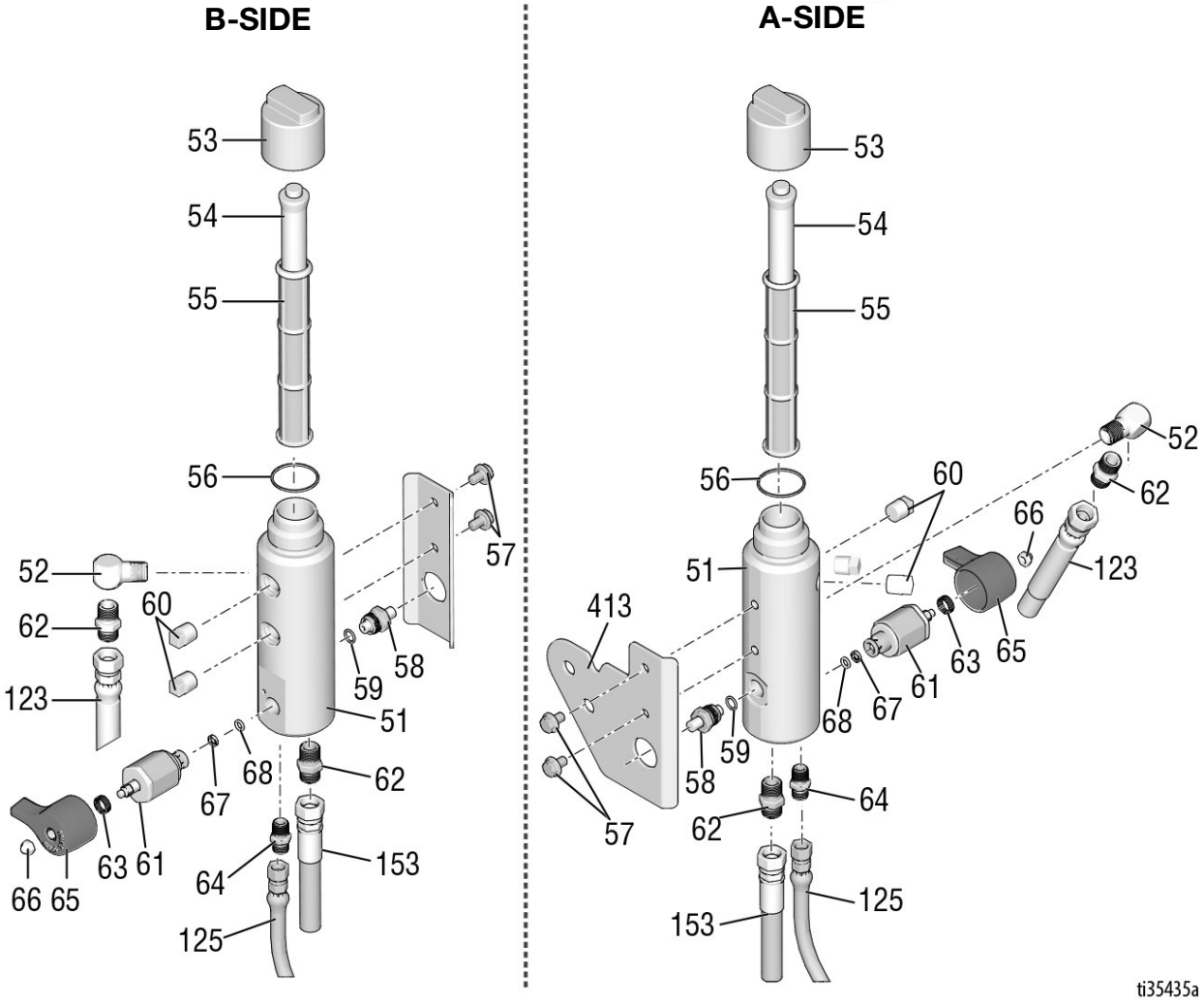

Parts List - Filters A & B

Ref.	Part	Description	Qty.
51	17K166	MANIFOLD, filter	2
52	196179	FITTING, elbow, street	1
53	15C765	CAP, filter	2
54	15C766	TUBE, diffusion	2
55	24V455	FILTER, fluid	2
56	117285	PACKING, o-ring	2
57	111801	SCREW, cap, hex hd	4
58	248024	TRANSDUCER, pressure control	2
59	111457	PACKING, o-ring	2
60	15G331	PLUG, pipe	4
61	287879	VALVE, drain, assy	2
62	196178	ADAPTER, nipple	2
63	114708	SPRING, compression	2
64	196181	FITTING, nipple	2
65	15G563	HANDLE, valve	2
66	116424	NUT, cap	2
67	193709	SEAT, valve	2
68	193710	SEAL, seat, valve	2
123	191239	HOSE, cpld, 3/8” x 11’10”	2
125	24V064	HOSE, suction/drain	2
153	245226	HOSE, coupled 3/8 x 3’	1
413	17Y104	BRACKET, manifold	1

Parts Drawing - Fluid Pumps A & B

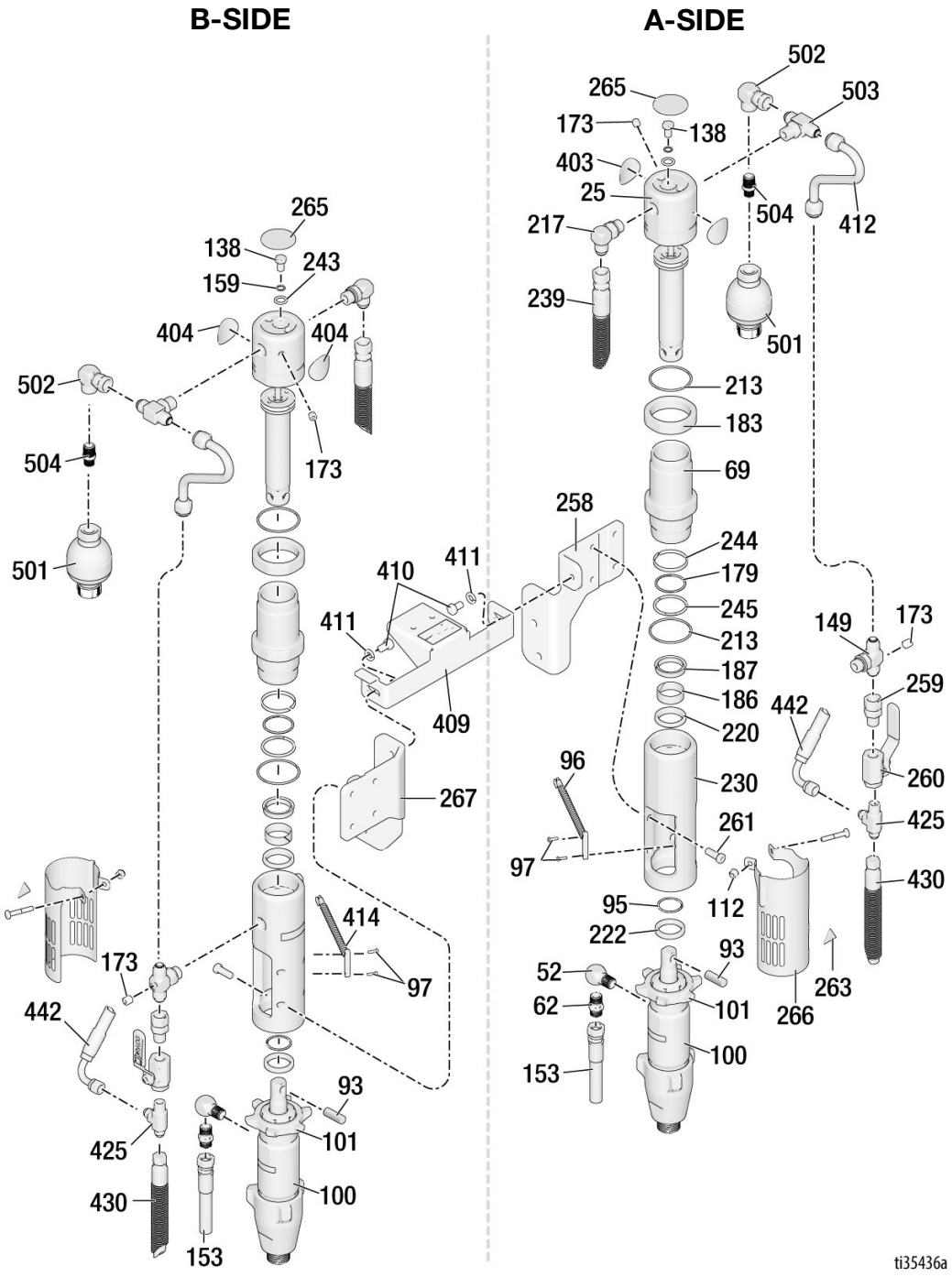

Parts List - Fluid Pumps A & B

Ref.	Part	Description	Qty.
25	288754	KIT, repair, trip rod/piston	1
52	196179	FITTING, elbow, street	2
62	196178	ADAPTER, nipple	2
69	246176	KIT, repair, sleeve, cylinder	1
93	197443	PIN, pump	1
95	116551	RING, retainer	1
96	119720	SWITCH, reed w/ connector	1
97	114528	SCREW, mach, phillips, pnhd	2
100	277068	PUMP, displacement	1
101	193394	NUT, retaining	1
112	102040	NUT, lock, hex	2
138*	106276	SCREW, cap, hex head	1
149	119841	FITTING, tee, branch, str thd	1
159*	155685	PACKING, o-ring	1
153	245226	HOSE, coupled 3/8 x 3’	1
173	100139	PLUG, pipe	1
179*‡	108014	PACKING, o-ring	1
183	15A726	NUT, jam	1
186*	112342	BEARING, rod	2
187‡	112561	PACKING, block	1
213*‡	117283	PACKING, o-ring	2
217	117607	FITTING, elbow, std thd	2
220*‡	117739	WIPER, rod	1
222	287186	KIT, repair, magnet	1
230	15A728	MANIFOLD, adapter	1
243*	178179	WASHER, sealing	1
239	287176	KIT, repair, hose	2
244*‡	178207	BEARING, piston	1
245*‡	178226	SEAL, piston	1
258	17Y049	BRACKET, mount, pump, left	1
259	117328	FITTING, nipple, straight	1
260	117441	VALVE, ball	1
261	107210	SCREW	4
263*▲	15H108	LABEL, warning, pinch point	2
265▲	15B063	LABEL, safety, warning, hot surface	1
266	24X474	COVER, assy, pump rod	1
267	17Y047	BRACKET, mount, pump, right	1
403	17Y328	LABEL, “A”	1
404	17Y329	LABEL, “B”	1
410	100133	WASHER, lock 3/8	2
411	100575	SCREW, cap, hex	2
412	15F519	TUBE, hydraulic, supply	1
414	131774	SWITCH, reed	1
425	131817	FITTING, tee	2
430	17Y306	HOSE, hydraulic, supply	2
442	15G784	HOSE, coupled	2
501	131814	ACCUMULATOR, diaphragm	2
502	115829	ADAPTER, swivel, 90°	2
503	113584	TEE, branch	2
504	131815	ADAPTER, straight	2

* *Included in Trip Rod/Piston/Cap Repair Kit 288754*

‡ *Included in Hydraulic Seal Repair Kit 246174*

▲ *Replacement safety labels, tags, and cards are available at no cost.*

Parts Drawing - Engine & Compressor

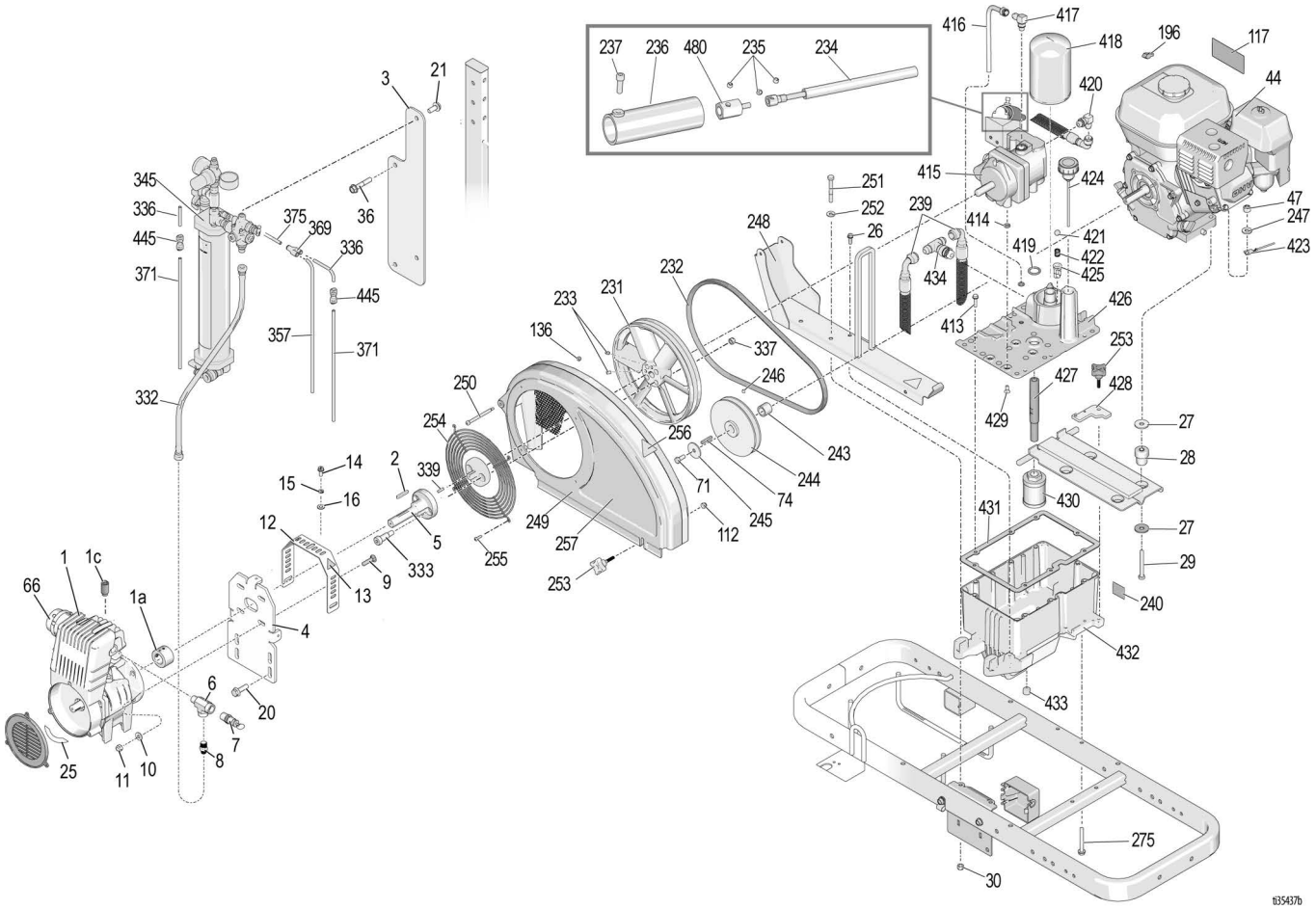

Parts List - Engine & Compressor

Ref.	Part	Description	Qty.
1	25R108	COMPRESSOR, oil	1
1a†	19B286	KIT, collar, shaft, *Includes 1b, 1d, 1e, and 23*	1
1b◆	25R109	COLLAR, shaft	1
1c†	25R114	BREATHER, oil	1
1d◆	25R110	SET SCREW, M5x8	1
1e◆	25R111	SET SCREW, M8x10	2
2	25P605	KEY, square, 3/16 x 1.34	1
3	25P599	BRACKET, air tank	1
4	25P600	BRACKET, compressor straight	1
5	25P602	COUPLER, mounting plate	1
6	124490	FITTING, tee, street	1
7	113769	VALVE, safety	1
8	164672	ADAPTER	1
9	17N821	BOLT, carriage	4
10	100527	WASHER, flat	4
11	111040	NUT, lock, insert, nylock, 5/16	4
12	25P598	GUARD, compressor	1
13▲	15H108	LABEL, safety, warning, pinch	2
14	108296	SCREW, mach, hex wash hd	3
15	100016	WASHER, lock	3
16	110755	WASHER, flt, 1/4 in.	3
20	111193	SCREW, cap flange hd	4
21	111192	SCREW, cap flange hd	2
25	25R330	GASKET, adhesive, compression	1
26	260212	SCREW, hex, washer hd, thd form	2
27	108851	WASHER, plain	8
28	15E888	DAMPENER, motor mount	4
29	113664	SCREW, cap, hex hd	4
30	111040	NUT, lock, insert, nylock, 5/16	2
31	111194	SCREW, cap, flang hd	2
36	111194	SCREW, cap flange hd	2
44	116080	ENGINE	1
	25P296	ENGINE, gas, 6.5HP, Honda, China	1
47	110838	NUT, lock	4
66†	25R115	FILTER, air, compressor	1
71	108842	SCREW, cap, hex hd	1
74	117632	KEY, square, 3/16x1.25	1
112	102040	NUT, lock, hex	1
117▲	194126	LABEL, warning	1
136	116969	NUT, lock	2
196	114956	TERMINAL, wire tap, insulated	1
231	16U205	PULLEY, fan	1
232	119433	BELT	1
233	120087	SCREW, set, 1/4 x 1/2	2
234	25A255	SHAFT, flexible, hydraulic control	1
235	112303	SCREW, set, socket w/ patch	3
236	15C958	GUARD, pressure control	1
237	112166	SCREW, cap, sch	7
239	15C364	HOSE, hydraulic, return	2
240	15K440	LABEL, brand, GH EH cooling	1
243	15B314	SLEEVE, motor shaft	1
244	15E758	PULLEY, 5.50 in.	1
245	112717	WASHER	1
246	100002	SCREW, set, sch	1
247	100023	WASHER, flat	4
248	288261	RAIL, belt guard, assy	1
249	288734	GUARD, belt (includes 136, 250, 254, 255)	1
250	119434	SCREW, shoulder, skt hd	1
251	802277	SCREW, machine	2
252	100527	WASHER, plain	2
253	15D862	NUT, hand	2
254	117284	GRILL, fan, guard	1
255	115477	SCREW, mach, torx pan hd	4
256▲	16M768	LABEL, warning, iso, pinch hazard	2
257	17H689	LABEL, brand, LLV 200HS, shroud	1
275	120981	SCREW, mach, hex washer hd	2
332	16T939	HOSE, coupled	1
333	126833	SCREW, shoulder, socket head	2
336	16U273	HOSE, pneumatic	3
337	112958	NUT, hex, flanged, 3/8-16	2
339	120376	KEY, square .188	1
345	17Y644	TANK, pressure, MMA	1
357	16U274	HOSE, pneumatic	1
369	115287	FITTING, Y tube	1
371	17C065	TUBE, air, 1/4 OD	3
375	190010	TUBE	2
445	16F366	FITTING, 1/4 ptc to 1/4 ptc, fda	2
413	119426	SCREW, mach, hex washer hd	8
414	107188	PACKING, o-ring	4
415	287179	KIT, repair, pump (includes 235, 414, 419, 429, 480)	1
416	246167	KIT, repair, case drain	1
417	110792	FITTING, elbow, male, 90°	1
418	246173	KIT, repair, oil filter	1
419	156401	PACKING, o-ring	1
420	116829	FITTING, elbow, hydraulic	1
421	100084	BALL, metallic	1
422	116967	SPRING, compression	1
423	240997	CONDUCTOR, ground	1
424	120726	CAP, breather, filler	1
425	198841	RETAINER, ball, pressure bypass	1
426	15M057	COVER, reservoir, 200HS	1
427	15E587	TUBE, suction	1
428	15E476	BRACKET, retainer, motor	1
429	117471	SCREW, mach, hex flat head	4
430	116919	FILTER, screen, suction	1
431	120604	GASKET, reservoir	1
432	15J513	TANK, reservoir	1
433	101754	PLUG, pipe, 3/8 nptf	1
434	126061	FITTING, #8 JIC tee, swivel	1
445	16F366	FITTING, 1/4 ptc to 1/4 ptc	2

▲ *Replacement safety labels, tags, and cards are available at no cost.*
* *Included in set 16R963*
◆ *Parts included in set 19B286*
† *Parts included in set 25R108*

Parts Drawing - EZ Align™ Swivel Wheel

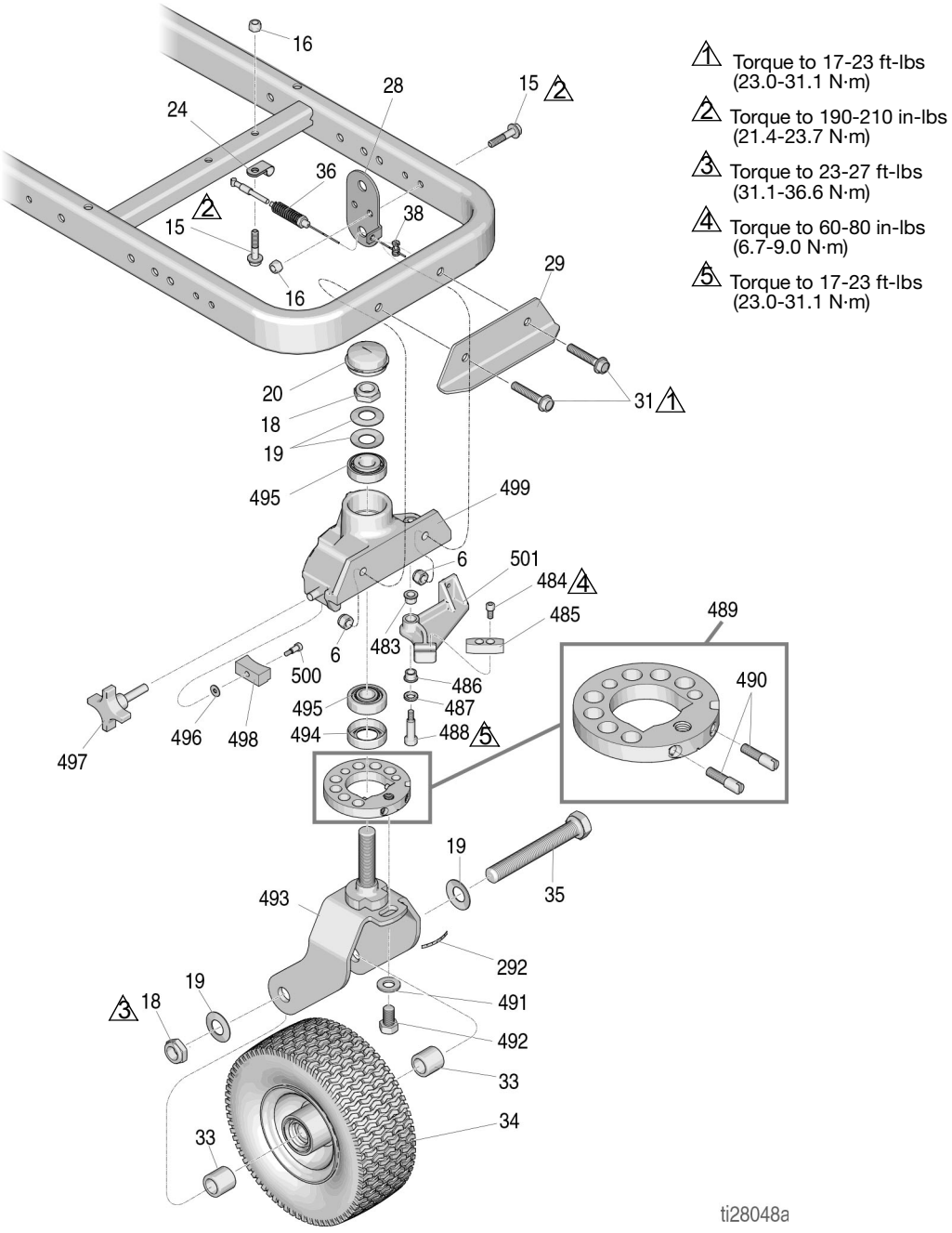

Parts List - EZ Align Swivel Wheel

Ref.	Part	Description	Qty.
6	101566	NUT, lock	2
15	112960	SCREW, cap, flange hd	3
16	111040	NUT, lock, insert, nylon, 5/16	3
18*‡	112405	NUT, lock	2
19*‡	112825	WASHER	4
20*‡	114648	CAP, dust	1
24	108868	CLAMP, wire	1
28‡	15F910	BRACKET, cable	1
29	240991	BRACKET, caster, front	1
31	114982	SCREW, cap, flange hd	2
33*‡	193658	SPACER, seal	2
34*	114549	WHEEL, pneumatic	1
35*	113471	SCRE, cap, hex hd	1
36‡	241445	CABLE	1
38‡	114802	STOP, wire	1
292*‡	17H489	LABEL, disk adjustment	1
483*‡	114548	BEARING, bronze	2
484*‡	110754	SCREW, cap, sch	2
485*‡	193662	STOP, wedge	1
487*‡	15J603	SPACER, round	1
488*‡	120476	BOLT, shoulder	1
489*‡	17H486	DISK, adjuster, assembly	1
490*‡	17G762	SCREW, disk adjuster	1
491*‡	113962	WASHER	1
492*	114681	SCREW, cap, hex hd	1
493*‡	17H485	FORK	1
494*‡	113484	SEAL, grease	1
495*‡	113485	BEARING, cup/cone	2
496*‡	112776	WASHER, plain	1
497*‡	181818	KNOB, pronged	1
498*‡	193661	JAW	1
499*‡	15G952	CASTER	1
500*‡	108483	SCREW, shoulder	1

** Included in Swivel Wheel Repair Kit 240719*

‡ Included in Swivel Wheel Repair Kit 241105

Parts Drawing - Pressure Tank

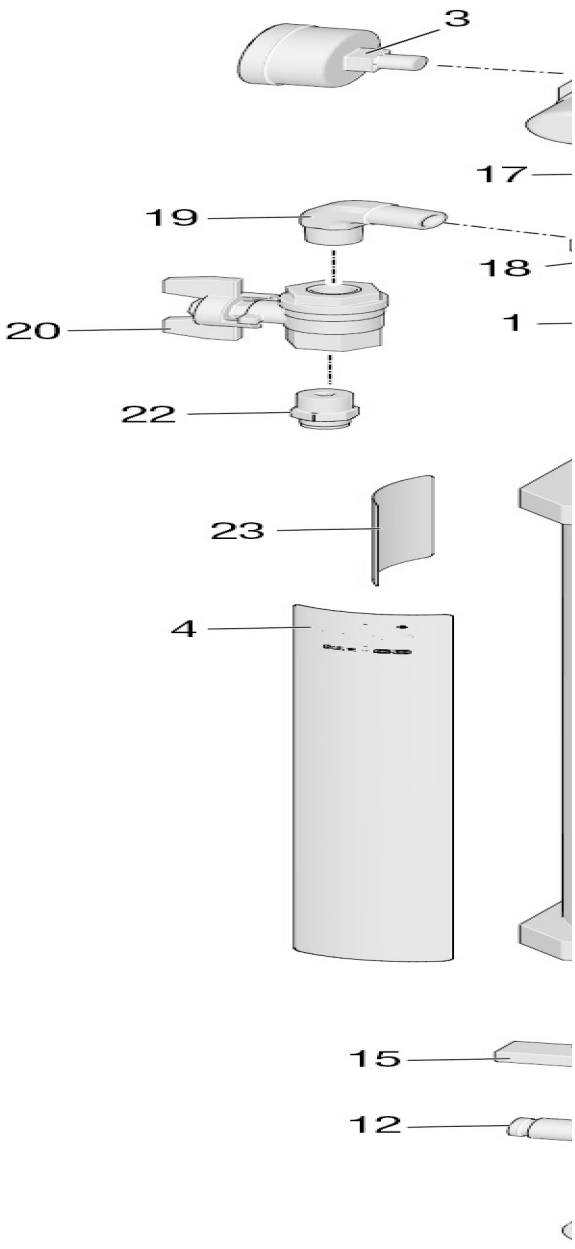

Parts List - Pressure Tank

Ref.	Part	Description	Qty.
1	156971	FITTING, nipple, short	2
2	187357	ELBOW, street	1
3	16W088	GAUGE, air pressure	1
4	194666	LABEL, LineLazer, EZ bead system	1
5	17C463	FITTING, tee, street	1
6	16U375	REGULATOR	1
7	126804	REGULATOR, unloader	1
8	162453	FITTING, 1/4 npsm x 1/4 npt	1
9	16U174	TANK, pressure	1
10	101971	PLUG, pipe	1
11	118486	FITTING, elbow, push	1
12	113321	FITTING, elbow, tube	1
13	116720	COUPLER, quick disconnect	1
14	104655	GAUGE, press air	1
15	15B565	VALVE, ball	1
16	070408	SEALANT, pipe, sst	1
17	156823	FITTING, union, swivel	1
18	116504	FITTING, tee, run	1
19	110249	ADAPTER, male elbow, 90°	1
20	122946	VALVE, shut off	1
21	101566	NUT, lock (not shown)	2
22	128637	FITTING, ptc, straight, 1/4	1
23	17Y520	LABEL, instructions, valve position	1

Gun Accessories

Stainless Steel Side Seal Kits

Kits include a packing o-ring for each stainless steel seal.

Kit Part No.	Description	No. of Seals Per Kit
246348	SEAL KIT, SST	2
277299	SEAL KIT, SST	50

Polycarballoy Side Seal Kits

Kits include a packing o-ring for each polycarballoy seal. The optional high wear, non-metallic polycarballoy seals are for alternate fluids.

Kit Part No.	Description	No. of Seals Per Kit
249990	SEAL KIT, Polycarballoy	2
277298	SEAL KIT, Polycarballoy	50

Gun Cover

244914 Covers

Keeps gun clean while spraying. Pack of 10.

Lubricant for Gun Rebuild

248279, 4 oz (113 gram) [10]

High adhesion, water resistant, lithium-based lubricant. SDS sheet available at www.graco.com.

Grease Cartridge for Gun Shutdown

248280 Cartridge, 3 oz [10]

Specially formulated low viscosity grease flows easily through gun passages, to prevent 2 component curing and keep fluid passages clean. See page 31.

Flushing Manifold

15B817 Manifold Block

See ref. no. 52, page 76.

Solvent Flush Canister Kit

248139, 1 qt (0.95 liter) Solvent Cup

Complete with15B817 Flushing Manifold to flush gun with solvent. Portable for remote flushing. See manual 309963.



TI4165a

Solvent Flush Pail Kit

248229 5.0 gal. (19 liter) Pail

Includes flush manifold with individual A and B shutoff valves, and air regulator. See manual 309963.

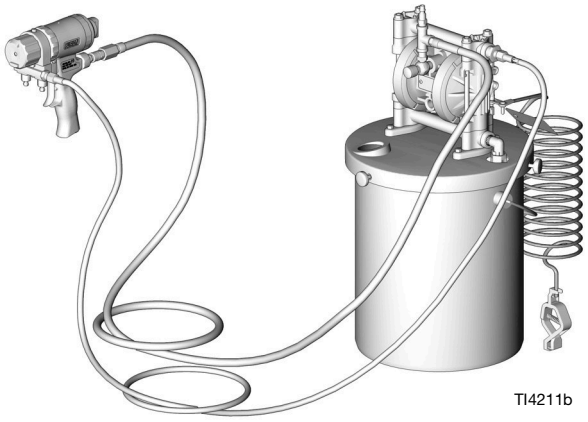

TI4211b

Gun Cleaning Kit

15D546

Kit includes 11 tools and brushes to clean the gun.

Check Valve Filter Screen Kits

Each kit includes ten filter screens.

The gun is shipped with 80 mesh filter screens.

Part	Description
246357	40 mesh (0.015 in., 375 micron)

Drill Bit Kit

119386

Kit includes 20 cleanout drill bits ranging in sizes of #61 through #80.

Handle Cleanout Drill Kit

248969

Kit includes all 5 drill bits of extra long length needed to clean out the air passages in the Air Purge gun handle.

Acceptable Cartridge Storage Liquids

Storage Liquid	Part
TSL	206994, 206995, 206996
ISO Pump Oil	217374, 218656

Cartridge Kits

Part	Description	Qty.
25V433	KIT, Fusion PC, cartridge, 1 pack	1
25V432	KIT, Fusion PC, cartridge, 4 pack	4

Fusion PC Cartridge Tools

25P660

Kit includes replacement jack screw, grease tool, and divider tool for easy cartridge removal and troubleshooting.

MMA Static Mixer

25U454

Fusion Gun attachment for cold weather applications where additional material mixing is necessary.

Part	Description
25U449	ADAPTER, MMA, static mixer
25U450	ADAPTER, tip guard, MMA, static
17L856	SEAL, o-ring
25U452	KIT, element mixer, 12 pack
25U729	CONTAINER, flush

Wiring Diagram

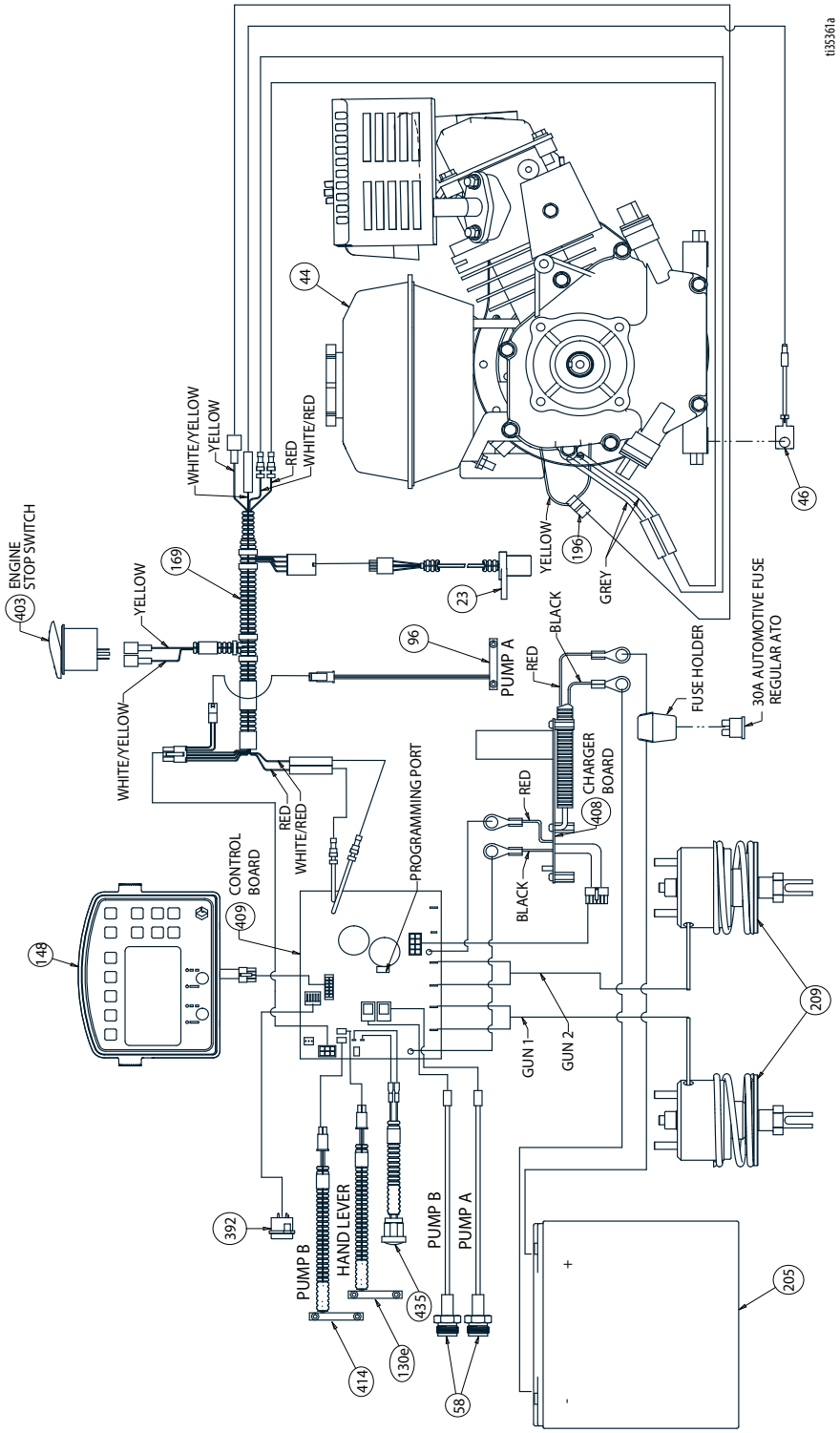

World Symbol Key

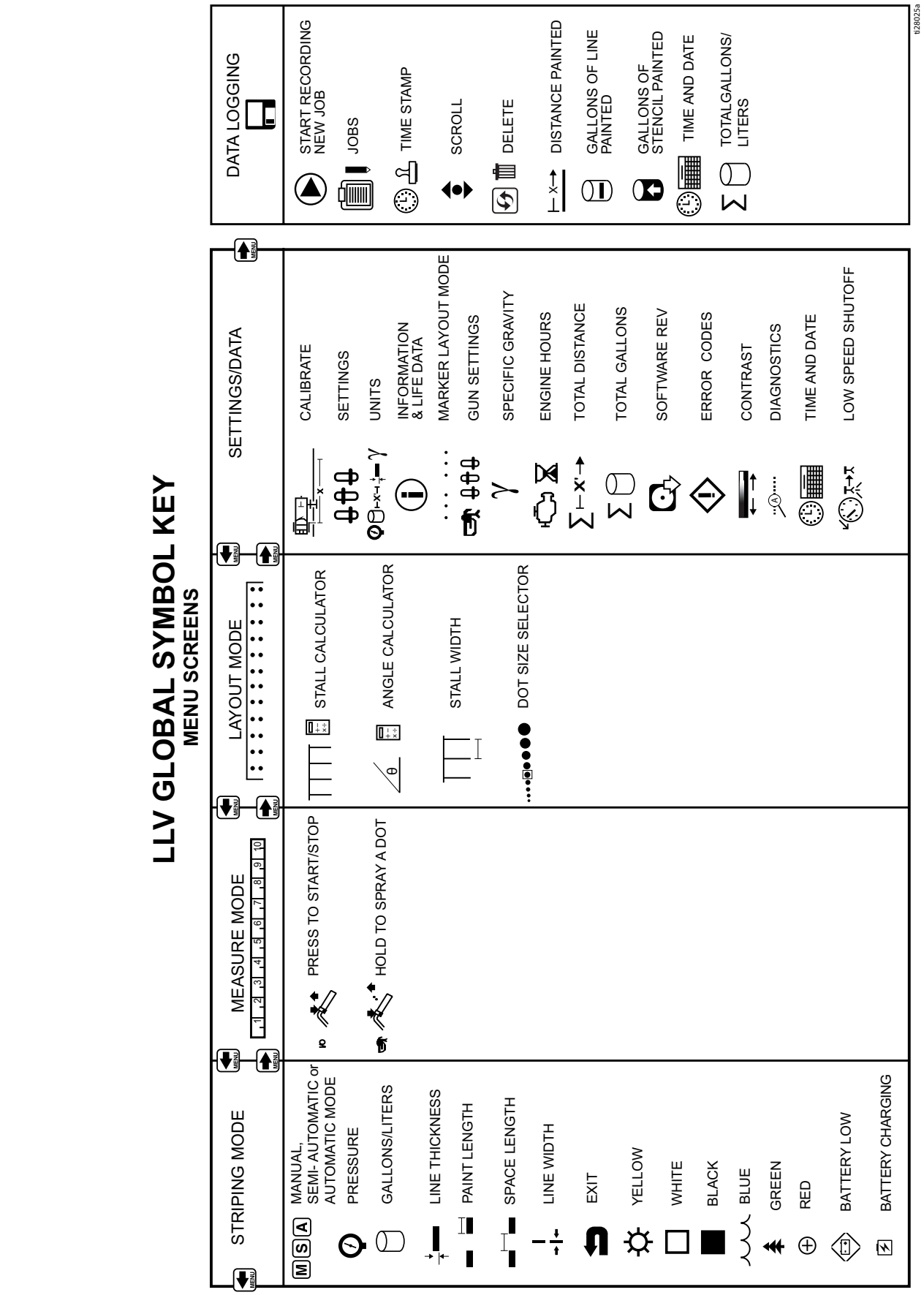

Technical Specifications

LineLazer V 200MMA (Models 17Y234, 18B025, 17Y513, 17Y233, 17Y514)		
	U.S.	**Metric**
Dimensions		
Height (with handle bar down)	Unpackaged - 44.5 in. Packaged - 52.5 in.	Unpackaged - 113.03 cm Packaged - 133.35 cm
Width	Unpackaged - 34.25 in. Packaged - 37.0 in.	Unpackaged - 87.0 cm Packaged - 93.98 cm
Length	Unpackaged - 68.75 in. Packaged - 73.5 in.	Unpackaged - 174.63 cm Packaged - 186.69 cm
Weight (dry - no paint)	Unpackaged - 554 lbs Packaged - 621 lbs	Unpackaged - 251 kg Packaged - 282 kg
Noise (dBa)		
Sound Power per ISO 9614:	99.0	
Sound Pressure per ISO 9614:	85.5	
Vibration (m/s^2) (8 hours daily exposure)		
Hand Arm (per ISO 5349)	Left hand 1.71 Right hand 2.23	
Whole Body (per ISO 2631)	0.4	
Power Rating (Horse Power)		
Power Rating (Horse Power) per SAE J1349	6.5 HP @ 3600 rpm	4.84 kW @ 3600 rpm
Maximum Delivery	2.15 gpm	8.14 lpm
Maximum Tip Size 1 gun 2 gun	 .047 .035	
Inlet paint strainer	16 mesh	1190 micron
Outlet paint strainer	40 mesh	297 micron
Pump inlet size	1 in. NSPM (m)	
Pump outlet size	3/8 NPT (f)	
Maximum working pressure	3300 psi	228 bar, 22.8 MPa
Maximum fluid working pressure	3300 psi	228 bar, 22.8 MPa
Maximum free-flow delivery	2.15 gpm	8.14 lpm
Cycles per gallon/liter	62 cpg	16.4 cpl
Hydraulic reservoir capacity	1.25 gallons	4.73 liters
Hydraulic pressure	1825 psi	124 bar
Electrical Capacity	84 W@ 3600 rpm	
Battery	12V, 22Ah, Sealed lead acid, Deep cycle	
Wetted Parts		
PTFE, Nylon, polyurethane, V-Max, UHMWPE, fluoroelastomer, acetal, leather, tungsten carbide, stainless steel, chrome plating, nickel-plated carbon steel, ceramic		

Technical Specifications - Gun

Fusion MMA PC Spray Gun		
	US	**Metric**
Maximum Fluid Working Pressure	3500 psi	24.5 MPa, 245 bar
Minimum Air Inlet Pressure	80 psi	0.56 MPa, 5.6 bar
Maximum Air Inlet Pressure	130 psi	0.9 MPa, 9 bar
Maximum Fluid Temperature	200° F	94° C
Air Inlet Size	1/4 push-to-connect	
A Component Inlet Size	1/4 NPT	
B Component Inlet Size	1/4 NPT	
Dimensions	7.5 x 8.1 x 3.3 in.	191 x 206 x 84 mm
Weight	2.5 lb	1.1 kg
Wetted Parts		
Gun	Aluminum, stainless steel, carbon steel, carbide, chemically resistant o-rings	
Cartridge air/grease ports	Stainless steel, aluminum, anodized aluminum, non-chemically resistant o-rings, nylon	
Cartridge fluid ports	Stainless steel, chemically-resistant o-rings, anodized aluminum, aluminum, polycarballoy, nylon	
Noise		
Maximum sound pressure	81.1 dB(A), using AR5252 at 100 psi (0.7 MPa, 7 bar)	
Maximum sound power	91.0 dB(A), using AR5252 at 100 psi (0.7 MPa, 7 bar)	
Sound power measured per ISO-9416-2.		
Notes		
All trademarks or registered trademarks are the property of their respective owners.		

Storage Time	Indefinite as long as parts/components are replaced according to Storage Maintenance schedule and storage procedures specifed in manual are followed.
Storage Maintenance	Replace leather packings and pressure control every 5 years.

Lifetime	Lifetime varies with use, materials sprayed, storage methods, and maintenance. Life minimum is 25 years.
Lifetime Service Maintenance	Replace leather packings and pressure control every 5 years or less based on use.

End of Life Disposal	If the sprayer is in a condition that it can no longer operate, the sprayer should be taken out of service and dismantled. Individual parts should be sorted by material and disposed of properly. Key construction materials can be found in the Materials of Construction Section. Electronic components are RoHS compliant and should be disposed of properly.

Graco Date Code/Serial Code	Month (First Character)	Year (2nd and 3rd Characters)	Series (4th Character)	Part Number (5th-10th Characters)	Series (11th-16th Characters)
Example Date Code: A16A	A = January	16 = 2016	A = serial control number		
Example Serial Code: L16A232749000102	L = December	16 = 2016	A = serial control number	6 digit alphanumeric part number	6 digit sequential serial number

California Proposition 65

CALIFORNIA RESIDENTS

⚠ **WARNING:** Cancer and reproductive harm – www.P65warnings.ca.gov.

Graco Standard Warranty

Graco warrants all equipment referenced in this document which is manufactured by Graco and bearing its name to be free from defects in material and workmanship on the date of sale to the original purchaser for use. With the exception of any special, extended, or limited warranty published by Graco, Graco will, for a period of twelve months from the date of sale, repair or replace any part of the equipment determined by Graco to be defective. This warranty applies only when the equipment is installed, operated and maintained in accordance with Graco's written recommendations.

This warranty does not cover, and Graco shall not be liable for general wear and tear, or any malfunction, damage or wear caused by faulty installation, misapplication, abrasion, corrosion, inadequate or improper maintenance, negligence, accident, tampering, or substitution of non-Graco component parts. Nor shall Graco be liable for malfunction, damage or wear caused by the incompatibility of Graco equipment with structures, accessories, equipment or materials not supplied by Graco, or the improper design, manufacture, installation, operation or maintenance of structures, accessories, equipment or materials not supplied by Graco.

This warranty is conditioned upon the prepaid return of the equipment claimed to be defective to an authorized Graco distributor for verification of the claimed defect. If the claimed defect is verified, Graco will repair or replace free of charge any defective parts. The equipment will be returned to the original purchaser transportation prepaid. If inspection of the equipment does not disclose any defect in material or workmanship, repairs will be made at a reasonable charge, which charges may include the costs of parts, labor, and transportation.

THIS WARRANTY IS EXCLUSIVE, AND IS IN LIEU OF ANY OTHER WARRANTIES, EXPRESS OR IMPLIED, INCLUDING BUT NOT LIMITED TO WARRANTY OF MERCHANTABILITY OR WARRANTY OF FITNESS FOR A PARTICULAR PURPOSE.

Graco's sole obligation and buyer's sole remedy for any breach of warranty shall be as set forth above. The buyer agrees that no other remedy (including, but not limited to, incidental or consequential damages for lost profits, lost sales, injury to person or property, or any other incidental or consequential loss) shall be available. Any action for breach of warranty must be brought within two (2) years of the date of sale.

GRACO MAKES NO WARRANTY, AND DISCLAIMS ALL IMPLIED WARRANTIES OF MERCHANTABILITY AND FITNESS FOR A PARTICULAR PURPOSE, IN CONNECTION WITH ACCESSORIES, EQUIPMENT, MATERIALS OR COMPONENTS SOLD BUT NOT MANUFACTURED BY GRACO. These items sold, but not manufactured by Graco (such as electric motors, switches, hose, etc.), are subject to the warranty, if any, of their manufacturer. Graco will provide purchaser with reasonable assistance in making any claim for breach of these warranties.

In no event will Graco be liable for indirect, incidental, special or consequential damages resulting from Graco supplying equipment hereunder, or the furnishing, performance, or use of any products or other goods sold hereto, whether due to a breach of contract, breach of warranty, the negligence of Graco, or otherwise.

Graco Information

TO PLACE AN ORDER, find us at rae-prostores.com or call us 1-877-275-7550.

All written and visual data contained in this document reflects the latest product information available at the time of publication.
Graco reserves the right to make changes at any time without notice.

Original instructions. This manual contains English. MM

Graco Headquarters: Minneapolis
International Offices: Belgium, China, Japan, Korea

GRACO INC. AND SUBSIDIARIES • P.O. BOX 1441 • MINNEAPOLIS MN 55440-1441 • USA
Copyright 2021, Graco Inc. All Graco manufacturing locations are registered to ISO 9001.

www.graco.com
Revision C, January 2023